Solicitation 243-11292

Project 11926 Annual Roofing Repair and Replacement City Wide

Bid designation: Public

CITY OF FORT LAUDERDALE

City of Fort Lauderdale

Bid 243-11292
Project 11926 Annual Roofing Repair and Replacement City Wide

Bid Number	**243-11292**
Bid Title	**Project 11926 Annual Roofing Repair and Replacement City Wide**
Bid Start Date	**Nov 14, 2013 2:40:36 PM EST**
Bid End Date	**Dec 18, 2013 2:00:00 PM EST**
Question & Answer End Date	**Dec 9, 2013 5:00:00 PM EST**
Bid Contact	**Jim Hemphill** **Sr. Procurement Specialist** **Procurement Department** **954-828-5143** **jhemphill@fortlauderdale.gov**

Description

INVITATION TO BID

Sealed bids will be received until 2:00 P.M. on **Wednesday, DECEMBER 18, 2013,** in the Public Works Department, City Hall, 100 North Andrews Avenue, 4th Floor, City of Fort Lauderdale, Florida and opened immediately thereafter in the Conference Room, for **Bid No. 243-11292, PROJECT NO. 11926 ANNUAL ROOFING REPAIR AND REPLACEMENT CITY-WIDE.**

This project consists of the project booklet and Detailed Drawings Sections.

The work includes repairs to City owned buildings associated with roofing, re-roofing and roof repair components for various locations within the City of Fort Lauderdale All items are based on a complete systems i.e. 4-ply SBS modified bitumen system (granular cap sheet). All installations shall meet all State of Florida requirements and Miami-Dade Notice of Acceptance (NOA) for high velocity. Please also refer to the typical Detail Drawings sections of this package.

Two (2) or Three (3) levels of work scope are indicated for most of the Proposal items. Small repair jobs from 0 to 500 square feet (S.F.), medium size roofing jobs 501 to 10,000 S.F., and large roofing jobs over 10,001 S.F. All proposal line items shall include maintenance, insurance, overhead, and other fixed costs. All Bidders shall have a State of Florida Roofing and General Contractor's licenses. Contractor to be Lightning Protection Certified and maintain an in-house Safety Officer.

Bidding blanks may be obtained free of charge at BIDSYNC.COM or hard copies may be picked up at the Public Works Department. Plans and specifications are on file in the Public Works Department, City of Fort Lauderdale at 100 North Andrews Avenue, 4th floor, (Monday thru Friday 8:00 am to 4:30 pm) at a **NON-REFUNDABLE cost of $25.00 (including sales tax per set)**. Only cash or cashier's check made payable to the City of Fort Lauderdale are accepted. Plans and specifications are also available on a CD diskette at a **NON-REFUNDABLE cost of $5.00 (including sales tax per CD).**

It will be the sole responsibility of the bidder to clearly mark the bid as such, and ensure that his bid reaches the City prior to the bid opening date and time listed.

A certified check, cashier's check, bank officer's check or bid bond for **TEN** percent (10%) of the amount bid, made payable to the City of Fort Lauderdale, Florida, shall accompany each proposal.

The City of Fort Lauderdale reserves the right to waive any informality in any or all and to reject any or all bids.

For information concerning technical specifications please utilize the question/answer feature provided by BidSync at www.bidsync.com. Questions of a material nature must be received prior to the cut-off date specified in the solicitation. Material changes, if any, to the scope of services or bidding procedures will only be transmitted by written addendum. (See addendum section of BidSync Site). Contractors please note: No part of your bid can be submitted via FAX. No variation in price or conditions shall be permitted based upon a claim of ignorance. Submission of a bid will be considered evidence that the Contractor has familiarized themselves with the nature and extent of the work, and the equipment, materials, and labor required. The entire bid response must be submitted in accordance with all specifications contained in this solicitation.

Information on bid results and projects currently out to bid can be obtained on the City's website – www.fortlauderdale.gov/engineering/bids.htm. For general inquiries - please call (954) 828-5143.

CITY OF FORT LAUDERDALE
CONTRACT AND SPECIFICATIONS PACKAGE

BID # 243-11292
PROJECT NO. 11926

ANNUAL ROOFING REPAIR AND REPLACEMENT CITY-WIDE

Public Works Department
100 North Andrews Avenue
Fort Lauderdale, Florida 33301

IRINA TOKAR, RA, LEED AP
SENIOR PROJECT MANAGER

JAMES HEMPHILL
SENIOR PROCUREMENT SPECIALIST
Telephone: (954) 828-5143; E-mail: jhemphill@fortlauderdale.gov

TABLE OF CONTENTS

DESCRIPTION **Page**

I. BID INFORMATION

Invitation to Bid ITB-1
Instruction to Bidders ..... IB-1 thru IB-5
Insurance ..... INS-1 thru INS-3

II. PROPOSAL PAGES

Proposal ..... P-1 thru P-3
Questionnaire Sheet ..... P-4 thru P-5

III. CONTRACTOR IDENTIFICATION

Local Business Preference ..... LBP-1 thru LBP-2
Minority Business Enterprise ..... MBE-1 thru MBE-2
Non-Collusion Statement NCS-1

IV. CONSTRUCTION AGREEMENT (SAMPLE) ..... C-1 thru C-36

V. GENERAL CONDITIONS ..... GC-1 thru GC-9

VI. SPECIFICATIONS

DIVISION 01 GENERAL SPECIFICATIONS

011000	Summary of Work	3
012200	Unit Prices	1
012600	Contract Modification Procedures	3
012900	Payment Procedures	4
013100	Project Management & Coordination	6
013200	Construction Progress Documentation	4
013300	Submittal Procedures	6
015000	Temporary Facilities & Utilities	3
016000	Product Requirements	5
017700	Closeout Procedures & Submittals	4

DIVISION 02 EXISTING CONDITIONS

024119	Selective Demolition	4
028200	Asbestos Remediation	3

DIVISION 07 THERMAL & MOISTURE PROTECTION

073113	Asphalt Shingles	5
073213	Clay Roof Tiles	6
073216	Concrete Roof Tiles	5
075116	Built-Up Coal Tar Roofing	7
075200	Modified Bituminous Roofing	13
075323	EPDM - Ethylene-Propylene-Diene-Monomer Roofing	5
075400	TPO -Thermoplastic Membrane Roofing	6
076100	Sheet Metal Roofing	9

DRAWING DETAIL SHEETS – LOW SLOPE ROOFS

R-1 Roof Edge Detail without Fascia
R-2 Roof Edge Detail with Fascia
R-3 Roof Edge Detail at Overhang
R-4 Insulation to Roof Deck Detail
R-5 Flashing Detail at Wall or Column
R-6 Gutter Detail at Roof Overhang
R-7 Parapet Detail with Metal Coping
R-8 Parapet Detail at Expansion Joint
R-9 Roof Expansion Joint Detail
R-10 Roof Hatch Detail
R-11 Exhaust Fan or Roof Vent Detail
R-12 Roof Curb at Package A/C Detail
R-13 Roof Opening Enclosure Detail
R-14 Roof Deck Opening Cover Detail
R-15 Roof Equipment Stand Detail
R-16 Pipe or Duct Pedestal Detail
R-17 Plumbing Roof Vent Detail
R-18 Connected Roof Penetration Detail
R-19 Disconnected Roof Penetration Detail
R-20 Roof Drain Detail
R-21 Roof Scupper Detail
R-22 Roof Edge Detail without Fascia (EPDM or TPO)
R-23 Roof Edge Detail with Fascia (EPDM or TPO)
R-24 Roof Edge Detail at Overhang (EPDM or TPO)
R-25 Insulation to Roof Deck Detail (EPDM or TPO)
R-26 Flashing Detail at Wall or Column (EPDM or TPO)
R-27 Mechanical Termination Detail (EPDM or TPO)
R-28 Parapet Detail with Metal Coping (EPDM or TPO)
R-29 Parapet Detail at Expansion Joint (EPDM or TPO)
R-30 Roof Expansion Joint Detail (EPDM or TPO)
R-31 Roof Hatch Detail (EPDM or TPO)
R-32 Exhaust Fan or Roof Vent Detail (EPDM or TPO)
R-33 Roof Membrane Splice Detail (EPDM or TPO)
R-34 Roof Opening Enclosure Detail (EPDM or TPO)
R-35 Typical Roof Deck Opening Cover Detail (EPDM or TPO)
R-36 Roof Equipment Stand Detail (EPDM or TPO)
R-37 Pipe or Duct Mounting Roof Pedestal Detail (EPDM or TPO)
R-38 Plumbing Roof Vent Detail (EPDM or TPO)
R-39 Roof Penetration Detail (EPDM or TPO)
R-40 TPO Sealant Pocket Detail (EPDM or TPO)

R-41 Roof Drain Detail (EPDM or TPO)
R-42 Roof Scupper Detail (EPDM or TPO)

DRAWING DETAIL SHEETS – STEEP SLOPE ROOFS

S-1 Standing Seam Metal Roof – Wood Fascia Detail
S-2 Standing Seam Metal Roof – Edge Detail
S-3 Standing Seam Metal Roof – Ridge Detail
S-4 Standing Seam Metal Roof – Seam Detail
S-5 Concrete Roof Tile – Ridge Detail
S-6 Concrete Roof Tile – Edge Detail
S-7 Asphalt/Shingle Roof – Edge Detail
S-8 Asphalt/Shingle Roof – Ridge Detail
S-9 Asphalt/Shingle Roof – Vent Detail
S-10 Asphalt/Shingle Roof – Plumbing Roof Vent Detail

INVITATION TO BID

Sealed bids will be received until 2:00 P.M. on **WEDNESDAY, DECEMBER 18, 2013,** in the Public Works Department, City Hall, 100 North Andrews Avenue, 4th Floor, City of Fort Lauderdale, Florida and opened immediately thereafter in the Conference Room, for **Bid No. 243-11292, PROJECT NO. 11926 ANNUAL ROOFING REPAIR AND REPLACEMENT CITY-WIDE.**

This project consists of the project booklet and Detailed Drawings Sections.

The work includes repairs to City owned buildings associated with roofing, re-roofing and roof repair components for various locations within the City of Fort Lauderdale All items are based on a complete systems i.e. 4-ply SBS modified bitumen system (granular cap sheet). All installations shall meet all State of Florida requirements and Miami-Dade Notice of Acceptance (NOA) for high velocity. Please also refer to the typical Detail Drawings sections of this package.

Two (2) or Three (3) levels of work scope are indicated for most of the Proposal items. Small repair jobs from 0 to 500 square feet (S.F.), medium size roofing jobs 501 to 10,000 S.F., and large roofing jobs over 10,001 S.F. All proposal line items shall include maintenance, insurance, overhead, and other fixed costs. All Bidders shall have a State of Florida Roofing and General Contractor's licenses. Contractor to be Lightning Protection Certified and maintain an in-house Safety Officer.

Bidding blanks may be obtained free of charge at BIDSYNC.COM or hard copies may be picked up at the Public Works Department. Plans and specifications are on file in the Public Works Department, City of Fort Lauderdale at 100 North Andrews Avenue, 4th floor, (Monday thru Friday 8:00 am to 4:30 pm) at a **NON-REFUNDABLE cost of $25.00 (including sales tax per set)**. Only cash or cashier's check made payable to the City of Fort Lauderdale are accepted. Plans and specifications are also available on a CD diskette at a **NON-REFUNDABLE cost of $5.00 (including sales tax per CD).**

It will be the sole responsibility of the bidder to clearly mark the bid as such, and ensure that his bid reaches the City prior to the bid opening date and time listed.

A certified check, cashier's check, bank officer's check or bid bond for **TEN** percent (10%) of the amount bid, made payable to the City of Fort Lauderdale, Florida, shall accompany each proposal.

The City of Fort Lauderdale reserves the right to waive any informality in any or all and to reject any or all bids.

For information concerning technical specifications please utilize the question/answer feature provided by BidSync at www.bidsync.com. Questions of a material nature must be received prior to the cut-off date specified in the solicitation. Material changes, if any, to the scope of services or bidding procedures will only be transmitted by written addendum. (See addendum section of BidSync Site). Contractors please note: No part of your bid can be submitted via FAX. No variation in price or conditions shall be permitted based upon a claim of ignorance. Submission of a bid will be considered evidence that the Contractor has familiarized themselves with the nature and extent of the work, and the equipment, materials, and labor required. The entire bid response must be submitted in accordance with all specifications contained in this solicitation.

Information on bid results and projects currently out to bid can be obtained on the City's website – www.fortlauderdale.gov/engineering/bids.htm. For general inquiries - please call (954) 828-5143.

Jonda K. Joseph
City Clerk

INSTRUCTIONS TO BIDDERS

The following instructions are given for the purpose of guiding bidders in properly preparing their bids or proposals. These directions have equal force and weight with the specifications and strict compliance is required with all of these provisions.

QUALIFICATIONS OF BIDDERS – No proposal will be accepted from, nor will any contract be awarded to, any person who is in arrears to the CITY OF FORT LAUDERDALE, upon any debt or contract, or who has defaulted, as surety or otherwise, upon any obligation to the City, or who is deemed irresponsible or unreliable by the City Commission of Fort Lauderdale.

PERSONAL INVESTIGATION - Bidders shall satisfy themselves by personal investigation, and by such other means as they may think necessary or desirable, as to the conditions affecting the proposed work and the cost. No information derived from maps, plans, specifications, or from the Engineer, City Manager, or their assistants shall relieve the Contractor from any risk or from fulfilling all terms of the contract.

INCONSISTENCIES – Any seeming inconsistency between different provisions of the plans, specifications, proposal or contract, or any point requiring explanation must be inquired into by the bidder, in writing, at least ten (10) days prior to the time set for opening proposals. After proposals are opened, the bidders shall abide by the decision of the Engineer as to such interpretation.

ADDENDA AND INTERPRETATIONS - No interpretations of the meaning of the plans, specifications or other contract documents will be made orally to any bidder. Prospective bidders must request such interpretation in writing as instructed in the bid package. To be considered, such request must be received by the Questions and Answers deadline as indicated in BIDSYNC.COM. Material changes, if any, to the scope of services or bidding procedures will only be transmitted by written addendum. **It is the bidder's responsibility to verify if addendums have been issued in BIDSYNC.COM.** Failure of any bidder to receive any such addenda or interpretation shall not relieve any bidder from any obligation under his bid as submitted. All addenda so issued shall become a part of the contract document. **Bidder** shall verify **in BIDSYNC.COM** that he has all addenda before submitting a bid.

LEGAL CONDITIONS - Bidders are notified to familiarize themselves with the provisions of the laws of the State of Florida relating to hours of labor on municipal work, and with the provisions of the laws of the State of Florida and the Charter and the ordinances of the City of Fort Lauderdale.

PUBLIC ENTITY CRIMES - A person or affiliate who has been placed on the convicted vendor list following a conviction for a public entity crime may not submit a bid on a contract to provide any goods or services to a public entity, may not submit a bid on a contract with a public entity for the construction or repair of a public building or public work, may not submit bids on leases of real property to a public entity, may not be awarded or perform work as a Contractor, supplier, subcontractor, or consultant under a contract with any public entity, and may not transact business with any public entity in excess of the threshold amount provided in Section 287.017, Florida Statutes, for CATEGORY TWO for a period of 36 months from the date of being placed on the convicted vendor list.

FORMS OF PROPOSALS - Each proposal and its accompanying statements must be made on the blanks provided. THE FORMS MUST BE SUBMITTED IN GOOD ORDER AND WITH ALL BLANKS COMPLETED. The forms must be enclosed in a sealed envelope when submitted to the Public Works Department, City Hall, 4th Floor, 100 North Andrews Avenue, Fort Lauderdale, Florida 33301 and must show the name of the bidder and a statement as to its contents.

INSTRUCTIONS TO BIDDERS (continued)

FORMS OF PROPOSALS (CONTINUED) - The proposal must be signed by one duly authorized to do so, and in case signed by a deputy or subordinate, the principal's properly written authority to such deputy or subordinate must accompany the proposal. No proposal will be accepted, for any reason whatsoever, which is not submitted to the Office of the City Engineer as stated above, within the specified time.

INSURANCE - Contractor shall provide and shall require all of its sub-contractors to provide, pay for, and maintain in force at all times during the term of the Agreement, such insurance, including Property Insurance (Builder's Risk), Commercial General Liability Insurance, Business Automobile Liability Insurance, Workers' Compensation Insurance, Employer's Liability Insurance, and Umbrella / Excess Liability, as stated below. Such policy or policies shall be issued by companies authorized to do business in the State of Florida and having agents upon whom service of process may be made in the State of Florida.

BID BOND - A certified check, cashier's check or bank officer's check, for the sum set forth in the advertisement, made payable to the City of Fort Lauderdale, Florida, or bid bond in such amount, shall accompany each proposal as evidence of the good faith and responsibility of the bidder. The check or bond shall be retained by the City as liquidated damages should the bidder refuse to or fail to enter into a contract for the execution of the work embraced in this proposal, in the event the proposal of the bidder is accepted. Retention of such amount shall not be construed as a penalty or forfeiture.

The above bond or check shall be a guarantee that the bidder will, if necessary, promptly execute a satisfactory contract and furnish good and sufficient bonds. As soon as a satisfactory contract has been executed and the bonds furnished and accepted, the check or bond accompanying the proposal of the successful bidder will be returned to him. The certified or other checks or bid bonds of the unsuccessful bidders will be returned to them upon the acceptance of the bid of the successful bidder. If the successful bidder shall not enter into, execute, and deliver such a contract and furnish the required bonds within ten (10) days after receiving notice to do so, the certified or other check or bid bond shall immediately become the property of the City of Fort Lauderdale as liquidated damages. Retention of such amount shall not be construed as a penalty or forfeiture.

FILLING IN BIDS - All prices must be written in the proposal and also stated in figures, and all proposals must fully cover all items for which proposals are asked and no other. Bidders are required to state the names and places of residence of all persons interested, and if no other person is interested, the bidder shall distinctly state such fact and shall state that the proposal is, in all respects, fair and without collusion or fraud. Where more than one person is interested, it is required that all persons interested or their legal representative make all verification and subscribe to the proposal.

PRICES QUOTED: Deduct any discount offered and quote firm net prices. Give both unit price and extended total. In the case of a discrepancy in computing the amount of the bid, the unit price quoted will govern. All prices quoted shall be F.O.B. destination, freight prepaid (Bidder pays and bears freight charges, Bidder owns goods in transit and files any claims), unless otherwise stated in Special Conditions. Each item must be bid separately. No attempt shall be made to tie any item or items contained in the ITB with any other business with the City.

BIDS FIRM FOR ACCEPTANCE: Bidder warrants, by virtue of bidding, that his bid and the prices quoted in his bid will be firm for acceptance by the City for a period of one hundred and twenty (120) days from the date of bid opening unless otherwise stated in the ITB.

CAUSES FOR REJECTION - No proposal will be canvassed, considered or accepted which, in the opinion of the City Commission, is informal or unbalanced, or contains inadequate or unreasonable prices for any items; each item must carry its own proportion of the cost as nearly as is practicable.

Revised 8/7/2013

INSTRUCTIONS TO BIDDERS (continued)

Any alteration, erasure, interlineation, or failure to specify bids for all items called for in the schedule shall render the proposal informal.

REJECTION OF BIDS - The City reserves the right to reject any bid if the evidence submitted by the bidder, or if the investigation of such bidder, fails to satisfy the City that such bidder is properly qualified to carry out the obligations and to complete the work contemplated. Any or all proposals will be rejected, if there is reason to believe that collusion exists among bidders. A proposal will be considered irregular and may be rejected, if it shows serious omissions, alterations in form, additions not called for, conditions or unauthorized alternates, or irregularities of any kind. The City reserves the right to reject any or all proposals and to waive such technical errors as may be deemed best for the interests of the City.

BID PROTEST PROCEDURE: Any proposer or bidder who is not recommended for award of a contract and who alleges a failure by the City to follow the City's procurement ordinance or any applicable law may protest to the Procurement Division – Deputy Director of Finance, by delivering a letter of protest within five (5) days after a Notice of Intent to award is posted on the City's website at the following link: http://www.fortlauderdale.gov/engineering/bids.htm. The complete protest ordinance may be found on the City's website at the following link: http://www.fortlauderdale.gov/purchasing/protestordinance.pdf

WITHDRAWALS - Any bidder may, without prejudice to himself, withdraw his proposal at any time prior to the expiration of the time during which proposals may be submitted. Such request for withdrawal must be in writing and signed in the same manner and by the same person who signed the proposal. After expiration of the period for receiving proposals, no proposal can be withdrawn, modified, or explained.

CONTRACT - The bidder to whom award is made shall execute a written contract to do the work and maintain the same in good repair until final acceptance by the proper authorities, and shall furnish good and sufficient bonds as specified within ten (10) days after receiving such contract for execution. If the bidder to whom the first award is made fails to enter into a contract as provided, the award may be annulled and the contract let to the next lowest bidder who is reliable, responsible, and responsive in the opinion of the City Commission, and that bidder shall fulfill every stipulation and obligation as if such bidder were the original party to whom award was made.

The contract shall provide that the Contractor agrees to correct any defective or faulty work or material, which may appear within one (1) year after completion of the work and receipt of final payment.

ENFORCEMENT OF SPECIFICATIONS - Copies of the specifications will be placed in the hands of all the assistants to the Engineer and Inspectors employed on the work, who shall enforce each and every requirement of the contract. Such assistants shall have no authority to vary from such requirements.

COPIES OF PLANS AND SPECIFICATIONS - Copies of the specifications, details, contract and bonds are on file in the Public Works Department, City Hall, 4th Floor, 100 N. Andrews Avenue, Fort Lauderdale, Florida 33301.

SURETY BOND - The successful bidder shall furnish a performance and payment bond in compliance with Section 255.05, Florida Statutes, written by a Corporate Surety company, holding a Certificate of Authority from the Secretary of the Treasury of the United States as acceptable sureties on federal bonds, in an amount equal to the total amount payable by the terms of the contract, executed and issued by a Resident Agent licensed by and having an office in the State of Florida, representing such Corporate Surety, conditioned for the due and faithful performance of the work, and providing in

INSTRUCTIONS TO BIDDERS (continued)

addition to all other conditions, that if the Contractor, or his or its subcontractors, fail to duly pay for any labor, materials, or other supplies used or consumed by such Contractor, or his or its subcontractor or subcontractors, in performance of the work contracted to be done, the Surety will pay the same in the amount not exceeding the sum provided in such bonds, together with interest at the rate of 15% per annum, and that they shall indemnify and save harmless the City of Fort Lauderdale to the extent of any and all payments in connection with carrying out of the contract, which the City may be required to make under the law.

The Contractor is required at all times to have a valid surety bond in force covering the work being performed. A failure to have such bond in force at any time shall constitute a default on the part of the Contractor. A bond written by a surety, which becomes disqualified to do business in the State of Florida, shall automatically constitute a failure on the part of the Contractor to meet the above requirements.

Such bond shall continue in effect for one (1) year after completion and acceptance of the work with liability equal to at least 25% of contract price, or an additional bond shall be conditioned that the Contractor will correct any defective or faulty work or material which appear within one (1) year after completion of the contract, upon notification by the City, except in contracts which are concerned solely with demolition work, in which cases 25% liability will not be applicable.

AUDIT OF CONTRACTOR'S RECORDS - Upon execution of the Contract, the City reserves the right to conduct any necessary audit of the Contractor's records. Such an audit, or audits, may be conducted by the City or its representatives at any time prior to final payment, or thereafter, for a period up to three (3) years. The City may also require submittal of the records from either the Contractor, the Subcontractor, or both. For the purpose of this Section, records shall include all books of account, supporting documents and papers deemed necessary by the City to assure compliance with the contract provisions.

Failure of the Contractor or Subcontractor to comply with these requirements may result in disqualification or suspension from bidding for future contracts or disapproval as a Subcontractor at the option of the City.

The Contractor shall assure that each of its Subcontractors will provide access to its records pertaining to the project upon request by the City.

PERIODIC ESTIMATE FOR PARTIAL PAYMENT - After the Contractor has submitted a periodic estimate for partial payment, approved and certified by the Office of the City Engineer, the City shall make payment in the manner provided in the Contract Documents and in accordance with Florida's Prompt Payment Act, Section 218, Florida Statutes.

RESERVATION FOR AWARD AND REJECTION OF BIDS - The City reserves the right to accept or reject any or all bids, part of bids, and to waive minor irregularities or variations to specifications contained in bids, and minor irregularities in the bidding process. The City also reserves the right to award the contract on a split order basis, lump sum basis, individual item basis, or such combination as shall best serve the interest of the City. The City reserves the right to make an award to the responsive and responsible bidder whose product or service meets the terms, conditions, and specifications of the ITB and whose bid is considered to best serve the City's interest. In determining the responsiveness of the offer and the responsibility of the Bidder, the following shall be considered when applicable: the ability, capacity and skill of the Bidder to perform as required; whether the Bidder can perform promptly, or within the time specified, without delay or interference; the character, integrity, reputation, judgment, experience and efficiency of the Bidder; the quality of past performance by the Bidder; the previous and existing compliance by the Bidder with related laws

INSTRUCTION TO BIDDERS (Continued)

and ordinances; the sufficiency of the Bidder's financial resources; the availability, quality and adaptability

INSTRUCTIONS TO BIDDERS (continued)

of the Bidder's supplies or services to the required use; the ability of the Bidder to provide future maintenance, service or parts; the number and scope of conditions attached to the bid.

Rev. 1/10/2013

INSURANCE REQUIREMENTS

10.1 Insurance

1.1 Contractor shall provide and shall require all of its sub-contractors to provide, pay for, and maintain in force at all times during the term of the Agreement, such insurance, including Property Insurance (Builder's Risk), Commercial General Liability Insurance, Business Automobile Liability Insurance, Workers' Compensation Insurance, Employer's Liability Insurance, and Umbrella/Excess Liability, as stated below. Such policy or policies shall be issued by companies authorized to do business in the State of Florida and having agents upon whom service of process may be made in the State of Florida.

A. The City is required to be named as additional insured on the Commercial General Liability insurance policy. BINDERS ARE UNACCEPTABLE. The insurance coverage required shall include those classifications, as listed in standard liability insurance manuals, which most nearly reflect the operations of the Contractor. Any exclusions or provisions in the insurance maintained by the Contractor that precludes coverage for the work contemplated in this Agreement shall be deemed unacceptable, and shall be considered a breach of contract.

B. The Contractor shall provide the City an original Certificate of Insurance for policies required by Article 10. All certificates shall state that the City shall be given ten (10) days' notice prior to expiration or cancellation of the policy. The insurance provided shall be endorsed or amended to comply with this notice requirement. In the event that the insurer is unable to accommodate, it shall be the responsibility of the Contractor to provide the proper notice. Such notification will be in writing by registered mail, return receipt requested and addressed to the Finance Department. Such policies shall: (1) name the insurance company or companies affording coverage acceptable to the City, (2) state the effective and expiration dates of the policies, (3) include special endorsements where necessary. Such policies provided under Article 10 shall not be affected by any other policy of insurance, which the City may carry in its own name.

C. Contractor shall as a condition precedent of this Agreement, furnish to the City of Fort Lauderdale, c/o Project Manager, 100 N. Andrews Avenue, Fort Lauderdale, FL 33301, Certificate(s) of Insurance upon execution of this Agreement, which indicate that insurance coverage has been obtained which meets the requirements as outlined below:

1.2 Property Insurance (Builder's Risk): The Contractor shall purchase and maintain property insurance upon the Work at or off the site of 100% of the

contract completed value. These policies shall insure the interest of the owner, contractor and subcontractors in the Work, and shall insure against "all risks" of physical loss and damage including theft, vandalism and malicious mischief, collapse and water damage. All such insurance required by this paragraph shall remain in effect until the Work is completed and accepted by the City.

1.3 Commercial General Liability

A. Limits of Liability:
Bodily Injury and Property Damage - Combined Single Limit

Each Occurrence	$1,000,000
Project Aggregate	$1,000,000
General Aggregate	$2,000,000
Personal Injury	$1,000,000
Products/Completed Operations	$1,000,000

B. Endorsements Required:
City of Fort Lauderdale included as an Additional Insured
Broad Form Contractual Liability
Waiver of Subrogation
Premises/Operations
Products/Completed Operations
Independent Contractors
Owners and Contractors Protective Liability
Contractors Pollution Liability

1.4 Business Automobile Liability

A. Limits of Liability:
Bodily Injury and Property Damage - Combined Single Limit
All Autos used in completing the contract
Including Hired, Borrowed or Non-Owned Autos
Any One Accident $1,000,000

B. Endorsements Required:
Waiver of Subrogation

1.5 Workers' Compensation and Employer's Liability Insurance

Limits: Workers' Compensation – Per Florida Statute 440
Employers' Liability - $500,000

Any firm performing work on behalf of the City of Fort Lauderdale must provide Workers' Compensation insurance. Exceptions and exemptions can only be made if they are in accordance with Florida Law.
Contractor must be in compliance with all applicable State and Federal workers' compensation laws, including the U.S. Longshore Harbor Workers' Act or Jones Act.

1.6 Umbrella/Excess Liability: The Contractor shall provide umbrella/excess coverage with limits of no less than $2,000,000 excess of Commercial General Liability, Automobile Liability and Employer's Liability.

1.7 All insurance policies required above shall be issued by companies authorized to do business under the laws of the State of Florida, with the following qualifications:

The Contractor's insurance must be provided by an A.M. Best's "A-" rated or better insurance company authorized to issue insurance policies in the State of Florida, subject to approval by the City's Risk Manager. Any exclusions or provisions in the insurance maintained by the Contractor that precludes coverage for work contemplated in this project shall be deemed unacceptable, and shall be considered breach of contract.
NOTE: CITY PROJECT NUMBER MUST APPEAR ON EACH CERTIFICATE.

Compliance with the foregoing requirements shall not relieve the Contractor of their liability and obligation under this section or under any other section of this Agreement.

The Contractor shall be responsible for assuring that the insurance certificates required in conjunction with this Section remain in force for the duration of the Project. If insurance certificates are scheduled to expire during the contractual period, the Contractor shall be responsible for submitting new or renewed insurance certificates to the City at a minimum of thirty (30) calendar days in advance of such expiration. In the event that expired certificates are not replaced with new or renewed certificates that cover the contractual period, the City shall:

A. Suspend the Agreement until such time as the new or renewed certificates are received by the City.

B. The City may, at its sole discretion, terminate the Agreement for cause and seek damages from the Contractor in conjunction with the violation of the terms and conditions of the Agreement.

PROPOSAL
Bid # 243-11292
PROJECT 11926
ANNUAL ROOFING REPAIR AND REPLACEMENT CITY-WIDE

TO THE COMMISSION OF THE CITY OF
FORT LAUDERDALE, FLORIDA

Gentlemen:

The undersigned bidder agrees to furnish all labor, tools, material and supplies, and to sustain all the expense incurred in doing the work set forth below that may be awarded the undersigned by the City of Fort Lauderdale, Florida, through its proper officers, and to do the same strictly in accordance with the plans and contract documents on file in the Office of the City Engineer of Fort Lauderdale, which are referred to below and made a part hereof, at the following unit prices, to-wit:

The following unit prices are associated with roofing, re-roofing and roof repair components. The City may choose different contractors for various complete low slope re-roofing or roofing repair projects. To be considered for these projects, please be comprehensive in filling out the items involved below. All items are based on a complete systems i.e. 4-ply SBS modified bitumen system (granular cap sheet). All installations shall meet all State of Florida requirements and Miami-Dade Notice of Acceptance (NOA) for high velocity. Please also refer to the typical Detail Drawings sections of this package.

Two (2) or Three (3) levels of work scope are indicated for most of the Proposal items. Small repair jobs from 0 to 500 square feet (S.F.), medium size roofing jobs 501 to 10,000 S.F., and large roofing jobs over 10,001 S.F. An approximate quantity is also provided and the "unit price" and total blanks to be completed by Bidder. All proposal line items shall include maintenance, insurance, overhead, and other fixed costs. All Bidders shall have a State of Florida Roofing and General Contractor's licenses. Contractor to be Lightening Protection Certified and maintain an in-house Safety Officer.

Please complete the following:

Base bid shall include:

ROOF MANUFACTURER'S NAME: _____

ROOF BRAND NAME: _____

INSULATION MANUFACTURER'S NAME: _____

INSULATION NAME: _____

ROOFING SYSTEM WARRANTY & PERIOD: _____

ITEM 1:

A) Prior to Contractor beginning any other work at the site, Contractor shall remove the asbestos containing material using a licensed asbestos abatement Contractor. Removal shall be in accordance with the asbestos test laboratory survey report recommendations provided by the City. This allowance is to

PROPOSAL (Continued) PROJECT 11926

Item 1 (continued)

reimburse the Contractor for the actual cost incurred from asbestos abatement and it does not include any incidental costs. The proposed cost for asbestos abatement shall be approved prior to performing the work. A copy of the receipt is required for payment.

ALLOWANCE $ 20,000.00
TOTAL

B) ALLOWANCE for Permits. Contractor markup and overhead is disallowed. Payment shall be based on actual bonafide receipts.

ALLOWANCE $ 10,000.00
TOTAL

ITEM 2: Furnish all materials, labor, and equipment for existing roof tear-off, including existing insulation board, down to substrate. This item also includes all disposal costs.

a) Small Roof Repair Areas:
0 S.F. - 500 S.F.
*Approximately: (2) Locations = 500 S.F @ **$**_____**/S.F.** = $*_____
TOTAL

b) Medium Roof Repair/Replacement areas.
501 S.F. - 10,000 S.F.
*Approximately: (2) Locations = 7,500 S.F @ **$**_____**/S.F.** =$*_____
TOTAL

c) Large Roof Repair/Replacement Areas:
Over 10,001 S.F.
*Approximately: (3) Locations = 25,000 S.F @ **$**_____**/S.F.** =$*_____
TOTAL

ITEM 3: Furnish all materials, labor, and equipment to install approved iso-therm or polyisocyanurate rigid insulation board tapered, based on 1½ inches thickness, fully attached to substrate.

A) **Mopped in:**

a) Small Roof Repair Areas:
0 S.F. - 500 S.F.
*Approximately: (2) Locations = 500 S.F @ **$**_____**/S.F.** = $*_____
TOTAL

b) Medium Roof Repair/Replacement areas.
501 S.F. - 10,000 S.F.
*Approximately: (2) Locations = 7,500 S.F @ **$**_____**/S.F.** =$*_____
TOTAL

c) Large Roof Repair/Replacement Areas:
Over 10,001 S.F.
*Approximately: (3) Locations = 25,000 S.F @ **$**_____**/S.F.** =$*_____
TOTAL

PROPOSAL (Continued) PROJECT 11926

Item 3 (continued)

B) **Mechanically attached:**

a) Small Roof Repair Areas:
0 S.F. - 500 S.F.
*Approximately: (2) Locations = 500 S.F @ **$**_____**/S.F.** = $_____*
TOTAL

b) Medium Roof Repair/Replacement areas.
501 S.F. - 10,000 S.F.
*Approximately: (2) Locations = 7,500 S.F @ **$**_____**/S.F.** =$_____*
TOTAL

c) Large Roof Repair/Replacement Areas:
Over 10,001 S.F.
*Approximately: (3) Locations = 25,000 S.F @ **$**_____**/S.F.** =$_____*
TOTAL

ITEM 4: Furnish all materials, labor, and equipment to install 4 ply modified bitumen system, with 2-ply base flashing, anchor sheet, with vent sheet, without insulation.

a) Small Roof Repair Areas:
0 S.F. - 500 S.F..
*Approximately: (2) Locations = 500 S.F @ **$**_____**/S.F.** = $_____*
TOTAL

b) Medium Roof Repair/Replacement areas.
501 S.F. - 10,000 S.F.
*Approximately: (2) Locations = 7,500 S.F @ **$**_____**/S.F.** =$_____*
TOTAL

c) Large Roof Repair/Replacement Areas:
Over 10,001 S.F.
*Approximately: (4) Locations = 25,000 S.F @ **$**_____**/S.F.** =$_____*
TOTAL

ITEM 5: Furnish all materials, labor, and equipment to install 4 ply modified bitumen system, with 2-ply base flashing, anchor sheet, without vent sheet (uninsulated applications).

A) **Mopped in:**

a) Small Roof Repair Areas:
0 S.F. - 500 S.F.
*Approximately: (2) Locations = 500 S.F @ **$**_____**/S.F.** = $_____*
TOTAL

b) Medium Roof Repair/Replacement areas.
501 S.F. - 10,000 S.F.
*Approximately: (2) Locations = 7,500 S.F @ **$**_____**/S.F.** =$_____*
TOTAL

PROPOSAL (Continued) PROJECT 11926

Item 5 (continued)

c) Large Roof Repair/Replacement Areas:
Over 10,001 S.F.
Approximately: (4) Locations = 46,200 S.F @ $_____/S.F. =$_____
TOTAL

B) **Mechanically attached:**

a) Small Roof Repair Areas:
0 S.F. - 500 S.F.
Approximately: (2) Locations = 500 S.F @ $_____/S.F. = $_____
TOTAL

b) Medium Roof Repair/Replacement areas.
501 S.F. - 10,000 S.F.

Approximately: (2) Locations = 7,500 S.F @ $_____/S.F. =$_____
TOTAL

c) Large Roof Repair/Replacement Areas:
Over 10,001 S.F.
Approximately: (3) Locations = 25,000 S.F @ $_____/S.F. =$_____
TOTAL

C) **Aluminum Roof Coating (For reflectivity for black roof systems (SRI 68 Min.):**
(Such as 'Apoch' Premium Rubberized Aluminum Roof Coating)

b) Small Roof Repair Areas:
0 S.F. - 500 S.F.
Approximately: (2) Locations = 500 S.F @ $_____/S.F. = $_____
TOTAL

b) Medium Roof Repair/Replacement areas.
501 S.F. - 10,000 S.F.
Approximately: (2) Locations = 8,800 S.F @ $_____/S.F. = $_____
TOTAL

c) Large Roof Repair/Replacement Areas:
Over 10,001 S.F.
Approximately: (4) Locations = 46,200 S.F @ $_____/S.F. =$_____
TOTAL

ITEM 6: Furnish all materials, labor, and equipment to install approved cants, 1½ inches thickness by 3½ inches wide.

a) Small Roof Repair Areas:
0 S.F. - 500 S.F.
Approximately: (2) Locations = 25 L.F @ $_____/L.F. = $_____
TOTAL

b) Medium Roof Repair/Replacement areas.
501 S.F. - 10,000 S.F.L
Approximately: (2) Locations = 90 L.F @ $_____/L.F. = $_____
TOTAL

c) Large Roof Repair/Replacement Areas:
Over 10,001 S.F. L
Approximately: (4) Locations = 200 L.F @ $_____/L.F. = $_____
TOTAL

PROPOSAL (Continued) PROJECT 11926

ITEM 7: Furnish all materials, labor, and equipment to install flexible, non-metallic flashings, 18 inches wide.

a) Small Roof Repair Areas:
0 S.F. - 500 S.F.
*Approximately: (2) Locations = 25 L.F @ **$**_____**/L.F.** = $_____*
TOTAL

b) Medium Roof Repair/Replacement areas.
501 S.F. - 10,000 S.F.
*Approximately: (2) Locations = 90 L.F @ **$**_____**/L.F.** = $_____*
TOTAL

c) Large Roof Repair/Replacement Areas:
Over 10,001 S.F.
*Approximately: (4) Locations = 200 L.F @ **$**_____**/L.F.** = $_____*
TOTAL

ITEM 8: Furnish all materials, labor, and equipment to install built-up roof repair/replacement, including pea gravel protection.

a) Small Roof Repair Areas:
0 S.F. - 500 S.F.
*Approximately: (1) Location = 450 S.F @ **$**_____**/S.F.** = $_____*
TOTAL

b) Medium Roof Repair/Replacement areas.
501 S.F. - 15,000 S.F.
*Approximately: (2) Locations = 12,000 S.F @ **$**_____**/S.F.** = $_____*
TOTAL

ITEM 9: Furnish all materials, labor, and equipment to install built-up roof pea gravel.

a) Small Roof Repair Areas:
0 S.F. - 500 S.F.
*Approximately: (1) Location = 450 S.F @ **$**_____**/S.F.** = $_____*
TOTAL

b) Medium Roof Repair/Replacement areas.
501 S.F. - 15,000 S.F.
*Approximately: (2) Locations = 12,000 S.F @ **$**_____**/S.F.** = $_____*
TOTAL

ITEM 10: Furnish all materials, labor, and equipment to install wall sheet metal flashing, 24 gauge stainless steel, 8 inches wide.

a) Small Roof Repair Areas:
0 S.F. - 500 S.F.
*Approximately: (2) Locations = 25 L.F @ **$**_____**/L.F.** = $_____*
TOTAL

b) Medium Roof Repair/Replacement areas.
501 S.F. - 10,000 S.F.
*Approximately: (2) Locations = 90 L.F @ **$**_____**/L.F.** = $_____*
TOTAL

PROPOSAL (Continued) PROJECT 11926

Item 10 (continued)

c) Large Roof Repair/Replacement Areas:
Over 10,001 S.F.
*Approximately: (4) Locations = 200 L.F @ **$**_____**/L.F.** = $*_____
TOTAL

ITEM 11: Furnish all materials, labor, and equipment to install continuous 4-inches metal drip edge.

A) **24 Gauge Galvanized Steel**

a) Small Roof Repair Areas:
0 S.F. - 500 S.F.
*Approximately: (2) Locations = 25 L.F @ **$**_____**/L.F.** = $*_____
TOTAL

b) Medium Roof Repair/Replacement areas.
501 S.F. - 10,000 S.F.
*Approximately: (2) Locations = 90 L.F @ **$**_____**/L.F.** = $*_____
TOTAL

c) Large Roof Repair/Replacement Areas:
Over 10,001 S.F.
*Approximately: (4) Locations = 200 L.F @ **$**_____**/L.F.** = $*_____
TOTAL

B) **24 Gauge Stainless Steel**

a) Small Roof Repair Areas:
0 S.F. - 500 S.F.
*Approximately: (2) Locations = 25 L.F @ **$**_____**/L.F.** = $*_____
TOTAL

b) Medium Roof Repair/Replacement areas.
501 S.F. - 10,000 S.F.
*Approximately: (2) Locations = 90 L.F @ **$**_____**/L.F.** = $*_____
TOTAL

c) Large Roof Repair/Replacement Areas:
Over 10,001 S.F.
*Approximately: (4) Locations = 200 L.F @ **$**_____**/L.F.** = $*_____
TOTAL

C) **Copper**

a) Small Roof Repair Areas:
0 S.F. - 500 S.F.
*Approximately: (2) Locations = 25 L.F @ **$**_____**/L.F.** = $*_____
TOTAL

b) Medium Roof Repair/Replacement areas.
501 S.F. - 10,000 S.F.
*Approximately: (2) Locations = 90 L.F @ **$**_____**/L.F.** = $*_____
TOTAL

c) Large Roof Repair/Replacement Areas:
Over 10,001 S.F.
*Approximately: (4) Locations = 200 L.F @ **$**_____**/L.F.** = $*_____
TOTAL

PROPOSAL (Continued) PROJECT 11926

Item 11 (continued)

D) **Aluminum**

a) Small Roof Repair Areas:
0 S.F. - 500 S.F.
*Approximately: (2) Locations = 25 L.F @ **$**_____**/L.F.** = $_____*
TOTAL

b) Medium Roof Repair/Replacement areas.
501 S.F. - 10,000 S.F.
*Approximately: (2) Locations = 90 L.F @ **$**_____**/L.F.** = $_____*
TOTAL

c) Large Roof Repair/Replacement Areas:
Over 10,001 S.F.
*Approximately: (4) Locations = 200 L.F @ **$**_____**/L.F.** = $_____*
TOTAL

ITEM 12: Furnish all materials, labor, and equipment to install wall counter flashing 24 gauge stainless steel, surface mounted with springlock reglet and 24 gauge stainless steel flashing, 6-inches vertical.

a) Small Roof Repair Areas:
0 S.F. - 500 S.F.
*Approximately: (2) Locations = 25 L.F @ **$**_____**/L.F.** = $_____*
TOTAL

b) Medium Roof Repair/Replacement areas.
501 S.F. - 10,000 S.F.
*Approximately: (2) Locations = 90 L.F @ **$**_____**/L.F.** = $_____*
TOTAL

c) Large Roof Repair/Replacement Areas:
Over 10,001 S.F.
*Approximately: (4) Locations = 200 L.F @ **$**_____**/L.F.** = $_____*
TOTAL

ITEM 13: Furnish all materials, labor, and equipment to install metal coping cap, snap-lok system, 8-inches wide.

A) **24 Gauge Galvanized Steel**

a) Small Roof Repair Areas:
0 S.F. - 500 S.F.
*Approximately: (2) Locations = 25 L.F @ **$**_____**/L.F.** = $_____*
TOTAL

b) Medium Roof Repair/Replacement areas.
501 S.F. - 10,000 S.F.
*Approximately: (2) Locations = 90 L.F @ **$**_____**/L.F.** = $_____*
TOTAL

c) Large Roof Repair/Replacement Areas:
Over 10,001 S.F.
*Approximately: (4) Locations = 200 L.F @ **$**_____**/L.F.** = $_____*
TOTAL

PROPOSAL (Continued) PROJECT 11926

Item 13 (continued)

B) **24 Gauge Stainless Steel**

a) Small Roof Repair Areas:
0 S.F. - 500 S.F.
*Approximately: (2) Locations = 25 L.F @ **$**_____**/L.F.** = $_____*
TOTAL

b) Medium Roof Repair/Replacement areas.
501 S.F. - 10,000 S.F.
*Approximately: (2) Locations = 90 L.F @ **$**_____**/L.F.** = $_____*
TOTAL

c) Large Roof Repair/Replacement Areas:
Over 10,001 S.F.
*Approximately: (4) Locations = 200 L.F @ **$**_____**/L.F.** = $_____*
TOTAL

C) **Aluminum with Kynar Finish**

a) Small Roof Repair Areas:
0 S.F. - 500 S.F.
*Approximately: (2) Locations = 25 L.F @ **$**_____**/L.F.** = $_____*
TOTAL

b) Medium Roof Repair/Replacement areas.
501 S.F. - 10,000 S.F.
*Approximately: (2) Locations = 90 L.F @ **$**_____**/L.F.** = $_____*
TOTAL

c) Large Roof Repair/Replacement Areas:
Over 10,001 S.F.
*Approximately: (4) Locations = 200 L.F @ **$**_____**/L.F.** = $_____*
TOTAL

ITEM 14: Furnish all materials, labor, and equipment to install pipe mounting pedestals (4), with equipment rail (3 feet x 3 feet), and flashing, 18 inches high.

*Approximately : (4) @ **$**_____**/EACH** = $_____*
TOTAL

ITEM 15: Furnish all materials, labor, and equipment to install pitch pocket, for 6-inch diameter vertical element.

*Approximately : (4) @ **$**_____**/EACH** = $_____*
TOTAL

ITEM 16: Furnish all materials, labor, and equipment to install pipe or duct mounting roof pedestal, 18 gauge galvanized steel complete with flashing, 12-inches high.

*Approximately : (4) @ **$**_____**/EACH** = $_____*
TOTAL

PROPOSAL (Continued) PROJECT 11926

ITEM 17: Furnish all materials, labor, and equipment to install roof penetration flashings, stainless steel 26 GA., with sealant cover, for vertical 6 inch diameter element, 9 inches high, umbrella type.

Approximately : (4) @ $_____/EACH = $_____
TOTAL

ITEM 18: Furnish all materials, labor, and equipment to install 12 inches high, 3 feet wide x 3 feet long, roof equipment support curbs, 1½ inches thick 3 lbs., rigid insulation, 18 GA., Galvanized steel shell, base plate and fully mitered 3 inches cant.

Approximately : (4) @ $_____/EACH = $_____
TOTAL

ITEM 19: Furnish all materials, labor, and equipment to install rubber boot flashings for vertical round penetrations, typically vent stacks, 4-6 inches diameter, 8 inches high, complete with stainless steel clamps.

Approximately : (4) @ $_____/EACH = $_____
TOTAL

ITEM 20: Furnish all materials, labor, and equipment to install 6 inches roof drain, standard dura-coated cast iron, steel inserts with strainer, and clamps (by Zurin, or approved equal).

Approximately : (4) @ $_____/EACH = $_____
TOTAL

ITEM 21: Furnish all materials, labor, and equipment to install expansion joint cover, without blocking.

a) Small Roof Repair Areas:
0 S.F. - 500 S.F.
Approximately: (2) Locations = 25 L.F @ $_____/L.F. = $_____
TOTAL

b) Medium Roof Repair/Replacement areas.
501 S.F. - 10,000 S.F.
Approximately: (2) Locations = 90 L.F @ $_____/L.F. = $_____
TOTAL

c) Large Roof Repair/Replacement Areas:
Over 10,001 S.F.
Approximately: (4) Locations = 200 L.F @ $_____/L.F. = $_____
TOTAL

PROPOSAL (Continued) PROJECT 11926

ITEM 22: Furnish all materials, labor, and equipment to install plumbing vent flashing, lead sleeve and coupling, installed 4 inch pipe.

*Approximately : (4) @ **$_____/EACH*** = $_____ **TOTAL**

ITEM 23: Furnish all materials, labor, and equipment to install 8 inches high x 16 inches wide metal scupper, (4) sided with integral drip strip and surface reglet flashing.

A) **24 Gauge Galvanized Steel**

*Approximately : (4) @ **$_____/EACH*** = $_____ **TOTAL**

B) **24 Gauge Stainless Steel**

*Approximately : (4) @ **$_____/EACH*** = $_____ **TOTAL**

ITEM 24: Furnish all materials, labor, and equipment to install 6 inches diameter leader.

A) **24 Gauge Galvanized Steel**

a) Small Roof Repair Areas:
0 S.F. - 500 S.F.
*Approximately: (2) Locations = 25 L.F @ **$_____/L.F.*** = $_____ **TOTAL**

b) Medium Roof Repair/Replacement areas.
501 S.F. - 10,000 S.F.
*Approximately: (2) Locations = 90 L.F @ **$_____/L.F.*** = $_____ **TOTAL**

c) Large Roof Repair/Replacement Areas:
Over 10,001 S.F.
*Approximately: (4) Locations = 200 L.F @ **$_____/L.F.*** = $_____ **TOTAL**

B) **24 Gauge Stainless Steel**

a) Small Roof Repair Areas:
0 S.F. - 500 S.F.
*Approximately: (2) Locations = 25 L.F @ **$_____/L.F.*** = $_____ **TOTAL**

b) Medium Roof Repair/Replacement areas.
501 S.F. - 10,000 S.F.
*Approximately: (2) Locations = 90 L.F @ **$_____/L.F.*** = $_____ **TOTAL**

c) Large Roof Repair/Replacement Areas:
Over 10,001 S.F.
*Approximately: (4) Locations = 200 L.F @ **$_____/L.F.*** = $_____ **TOTAL**

PROPOSAL (Continued) PROJECT 11926

Item 24 (continued)

C) **Anodized Aluminum**

a) Small Roof Repair Areas:
0 S.F. - 500 S.F.
*Approximately: (2) Locations = 25 L.F @ **$**_____**/L.F.** = $_____*
TOTAL

b) Medium Roof Repair/Replacement areas.
501 S.F. - 10,000 S.F.
*Approximately: (2) Locations = 90 L.F @ **$**_____**/L.F.** = $_____*
TOTAL

c) Large Roof Repair/Replacement Areas:
Over 10,001 S.F.
*Approximately: (4) Locations = 200 L.F @ **$**_____**/L.F.** = $_____*
TOTAL

ITEM 25: Furnish all materials, labor, and equipment to install continuous 4 inch wide metal gutter system.

A) **24 Gauge Galvanized Steel**

a) Small Roof Repair Areas:
0 S.F. - 500 S.F.
*Approximately: (2) Locations = 25 L.F @ **$**_____**/L.F.** = $_____*
TOTAL

b) Medium Roof Repair/Replacement areas.
501 S.F. - 10,000 S.F.
*Approximately: (2) Locations = 90 L.F @ **$**_____**/L.F.** = $_____*
TOTAL

c) Large Roof Repair/Replacement Areas:
Over 10,001 S.F.
*Approximately: (4) Locations = 200 L.F @ **$**_____**/L.F.** = $_____*
TOTAL

B) **24 Gauge Stainless Steel**

a) Small Roof Repair Areas:
0 S.F. - 500 S.F.
*Approximately: (2) Locations = 25 L.F @ **$**_____**/L.F.** = $_____*
TOTAL

b) Medium Roof Repair/Replacement areas.
501 S.F. - 10,000 S.F.
*Approximately: (2) Locations = 90 L.F @ **$**_____**/L.F.** = $_____*
TOTAL

c) Large Roof Repair/Replacement Areas:
Over 10,001 S.F.
*Approximately: (4) Locations = 200 L.F @ **$**_____**/L.F.** = $_____*
TOTAL

PROPOSAL (Continued) PROJECT 11926

Item 25 (continued)

C) **Anodized Aluminum**

a) Small Roof Repair Areas:
0 S.F. - 500 S.F.
*Approximately: (2) Locations = 25 L.F @ **$**_____**/L.F.** = $_____*
TOTAL

b) Medium Roof Repair/Replacement areas.
501 S.F. - 10,000 S.F.
*Approximately: (2) Locations = 90 L.F @ **$**_____**/L.F.** = $_____*
TOTAL

c) Large Roof Repair/Replacement Areas:
Over 10,001 S.F.
*Approximately: (4) Locations = 200 L.F @ **$**_____**/L.F.** = $_____*
TOTAL

ITEM 26: The following time costs are for emergency work only as authorized by the City of Fort Lauderdale:

A) Supervisor (Labor price should be included in your bid for items indicated)

Regular Rate
*Approximately: 500 Hours @ $_____**/HOUR** = $_____*
TOTAL

Overtime Rate
*Approximately: 200 Hours @ $_____**/HOUR** = $_____*
TOTAL

B) Journeyman (Labor price should be included in your bid for items indicated)

Regular Rate
*Approximately: 500 Hours @ $_____**/HOUR** = $_____*
TOTAL

Overtime Rate
*Approximately: 200 Hours @ $_____**/HOUR** = $_____*
TOTAL

C) Roofer's Helper (Labor price should be included in your bid for items indicated)

Regular Rate
*Approximately: 500 Hours @ $_____**/HOUR** = $_____*
TOTAL

Overtime Rate
*Approximately: 200 Hours @ $_____**/HOUR** = $_____*
TOTAL

ITEM 27: Furnish all materials, labor, and equipment to install 60 Mil, Type II, fabric reinforced Uniform **EPDM** with a Class 'A' Rating. The membrane is to be mechanically fastened through the metal deck system (approved warranty method as manufactured by 'Carlisle Syntec' for existing warrantied system.

Item 27 (continued)

a) Small Roof Repair Areas:
0 S.F. - 200 S.F..
*Approximately: (2) Locations = 500 S.F @ **$**_____**/S.F.** = $_____*
TOTAL

b) Medium Roof Repair/Replacement areas.
200 S.F. – 2,000 S.F.
*Approximately: (2) Locations = 1,500 S.F @ **$**_____**/S.F.** = $_____*
TOTAL

c) Large Roof Repair/Replacement Areas:
Over 2,000 S.F.
*Approximately: (4) Locations = 5,200 S.F @ **$**_____**/S.F.** = $_____*
TOTAL

ITEM 28: Furnish all materials, labor, and equipment to install 60 Mil, fabric reinforced Uniform **TPO (Thermoplastic Polyolefin Sheet)** with exposed white face, min. SRI 78, fully adhered / mechanically fastened system as manufactured by 'Carlisle Syntec for existing approved warrantied system. The membrane is to be mechanically fastened through the metal deck system or adhered to concrete deck (approved warranty method as manufactured by 'Carlisle Syntec' or other manufacturer for existing warrantied system).

a) Small Roof Repair Areas:
0 S.F. - 500 S.F..
*Approximately: (2) Locations = 500 S.F @ **$**_____**/S.F.** = $_____*
TOTAL

b) Medium Roof Repair/Replacement areas.
500 S.F. – 3,000 S.F.
*Approximately: (2) Locations = 3,500 S.F @ **$**_____**/S.F.** = $_____*
TOTAL

c) Large Roof Repair/Replacement Areas:
Over 3,000 S.F.
*Approximately: (3) Locations = 25,000 S.F @ **$**_____**/S.F.** =$_____*
TOTAL

ITEM 29: Furnish all materials, labor, and equipment to install Built Up **Coal Tar** Roofing system with membrane ply sheets as indicated.

a) Small Roof Repair Areas:
0 S.F. - 500 S.F..
*Approximately: (2) Locations = 500 S.F @ **$**_____**/S.F.** = $_____*
TOTAL

b) Medium Roof Repair/Replacement areas.
501 S.F. – 10,000 S.F.
*Approximately: (2) Locations = 3,500 S.F @ **$**_____**/S.F.** = $_____*
TOTAL

PROPOSAL (Continued) PROJECT 11926

Item 29 (continued)

c) Large Roof Repair/Replacement Areas:

Over 10,000 S.F.
*Approximately: (4) Locations = 22,200 S.F @ **$**_____**/S.F.** =$_____*
TOTAL

ITEM 30: Furnish all materials, labor, and equipment for existing roof tear-off, down to substrate. This item also includes all disposal costs.

A) **Asphalt Shingles**:

b) Small Roof Repair Area:
0 S.F. - 500 S.F.
*Approximately: (3) Locations = 1,500 S.F @ **$**_____**/S.F.** = $_____*
TOTAL

b) Medium to Large Roof Repair Area
501 S.F. and Up
*Approximately: (2) Locations = 2,000 S.F @ **$**_____**/S.F.** = $_____*
TOTAL

B) **Concrete/Clay Tile**

a) Small Roof Repair Area:
0 S.F. - 500 S.F..
*Approximately: (3) Locations = 1,500 S.F @ **$**_____**/S.F.** = $_____*
TOTAL

b) Medium to Large Roof Repair Area
501 S.F. and Up
*Approximately: (2) Locations = 2,000 S.F @ **$**_____**/S.F.** = $_____*
TOTAL

C) **Standing Seam Metal Roof**

a) Small Roof Repair Area:
0 S.F. - 500 S.F..
*Approximately: (3) Locations = 1,500 S.F @ **$**_____**/S.F.** = $_____*
TOTAL

b) Medium to Large Roof Repair Area
501 S.F. and Up
*Approximately: (2) Locations = 2,000 S.F @ **$**_____**/S.F.** = $_____*
TOTAL

D) **Metal Shingles**

a) Small Roof Repair Area:
0 S.F. - 500 S.F.
*Approximately: (3) Locations = 1,500 S.F @ **$**_____**/S.F.** = $_____*
TOTAL

b) Medium to Large Roof Repair Area
501 S.F. and Up
*Approximately: (2) Locations = 2,000 S.F @ **$**_____**/S.F.** = $_____*
TOTAL

ITEM 31: Furnish all materials, labor, and equipment for the replacement of deteriorated wood substrates.

A) **5/8-inch CDX Plywood:**

a) Small Roof Repair Area:
0 S.F. - 500 S.F.
Approximately: (3) Locations = 1,500 S.F @ $_____/S.F. = $_____
TOTAL

b) Medium to Large Roof Repair Area
501 S.F. and Up
Approximately: (2) Locations = 2,000 S.F @ $_____/S.F. = $_____
TOTAL

B) **2-inches x 6-inches T&G Wood (Fir):**

a) Small Roof Repair Area:
0 S.F. - 500 S.F.
Approximately: (3) Locations = 1,500 S.F @ $_____/S.F. = $_____
TOTAL
Curved Roof: (1) Location = 1,500 S.F @ $_____/S.F. = $_____
TOTAL

b) Medium to Large Roof Repair Area
501 S.F. and Up
Approximately: (2) Locations = 2,000 S.F @ $_____/S.F. = $_____
TOTAL

Curved Roof: (1) Location = 2,500 S.F @ $_____/S.F. = $_____
TOTAL

ITEM 32: Furnish all materials, labor, and equipment to install the underlayment materials.

A) **6 Mil Polyethylene Sheet:**

a) Small Roof Repair Area:
0 S.F. - 500 S.F.
Approximately: (3) Locations = 1,500 S.F @ $_____/S.F. = $_____
TOTAL

b) Medium to Large Roof Repair Area
501 S.F. and Up
Approximately: (2) Locations = 2,000 S.F @ $_____/S.F. = $_____
TOTAL

B) **30 Lbs. Felts saturated, organic:**

a) Small Roof Repair Area:
0 S.F. - 500 S.F.
Approximately: (3) Locations = 1,500 S.F @ $_____/S.F. = $_____
TOTAL

b) Medium to Large Roof Repair Area
501 S.F. and Up
Approximately: (2) Locations = 2,000 S.F @ $_____/S.F. = $_____
TOTAL

PROPOSAL (Continued) PROJECT 11926

Item 32 (continued)

C) **Self-Adhering underlayment granular face sheet, 55 Mils, fiberglass mat reinforced and SBS asphalt:**

a) Small Roof Repair Area:
0 S.F. - 500 S.F.
Approximately: (3) Locations = 1,500 S.F @ $_____/S.F. = $_____
TOTAL

b) Medium to Large Roof Repair Area
501 S.F. and Up
Approximately: (2) Locations = 2,000 S.F @ $_____/S.F. = $_____
TOTAL

D) **Self-Adhering underlayment polyethylene sheet, 40 Mils, slip resisting polythene film.**

a) Small Roof Repair Area:
0 S.F. - 500 S.F.
Approximately: (3) Locations = 1,500 S.F @ $_____/S.F. = $_____
TOTAL

b) Medium to Large Roof Repair Area
501 S.F. and Up
Approximately: (2) Locations = 2,000 S.F @ $_____/S.F. = $_____
TOTAL

E) **Self-Adhering sheet underlayment, high temperature sheet, 40 Mils, with slip resisting polyethylene top surface laminated to SBS modified asphalt adhesive:**

a) Small Roof Repair Area:
0 S.F. - 500 S.F.
Approximately: (3) Locations = 1,500 S.F @ $_____/S.F. = $_____
TOTAL

b) Medium to Large Roof Repair Area
501 S.F. and Up
Approximately: (2) Locations = 2,000 S.F @ $_____/S.F. = $_____
TOTAL

F) **Slip sheet building paper, 5 lbs.,/100 S.F., rosin sized**

a) Small Roof Repair Area:
0 S.F. - 500 S.F.
Approximately: (3) Locations = 1,500 S.F @ $_____/S.F. = $_____
TOTAL

b) Medium to Large Roof Repair Area
501 S.F. and Up
Approximately: (2) Locations = 2,000 S.F @ $_____/S.F. = $_____
TOTAL

PROPOSAL (Continued) PROJECT 11926

ITEM 33: Furnish all materials, labor, and equipment to install pressure treated blocking.

A) **2 x 4**

a) Small Roof Repair Area:
0 S.F. - 500 S.F.
Approximately: (3) Locations = 100 L.F. @ $_____/L.F. = $_____
TOTAL

b) Medium to Large Roof Repair Area
501 S.F. and Up
Approximately: (2) Locations = 300 L.F. @ $_____/L.F. = $_____
TOTAL

B) **2 x 6**

a) Small Roof Repair Area:
0 S.F. - 500 S.F.
Approximately: (3) Locations = 100 L.F. @ $_____/L.F. = $_____
TOTAL

b) Medium to Large Roof Repair Area
501 S.F. and Up
Approximately: (2) Locations = 300 L.F. @ $_____/L.F. = $_____
TOTAL

C) **2 x 8**

a) Small Roof Repair Area:
0 S.F. - 500 S.F.
Approximately: (3) Locations = 100 L.F. @ $_____/L.F. = $_____
TOTAL

b) Medium to Large Roof Repair Area
501 S.F. and Up
Approximately: (2) Locations = 300 L.F. @ $_____/L.F. = $_____
TOTAL

ITEM 34: Furnish all materials, labor, and equipment to install sheet metal flashings and trim.

A) **24 Gauge Stainless Steel Drip Edge – 4-inch Profile**

a) Small Roof Repair Area:

0 S.F. - 500 S.F.
Approximately: (3) Locations = 100 L.F. @ $_____/L.F. = $_____
TOTAL

b) Medium to Large Roof Repair Area
501 S.F. and Up
Approximately: (2) Locations = 300 L.F. @ $_____/L.F. = $_____
TOTAL

ITEM 35: Furnish all materials, labor, and equipment to install metal gutter.

A) **6-inch x 6-inch 24 Gauge Galvanized Steel Gutter**

a) Small Roof Repair Area:
0 S.F. - 500 S.F.
Approximately: (3) Locations = 100 L.F. @ $_____/L.F. = $_____
TOTAL

b) Medium to Large Roof Repair Area
501 S.F. and Up
Approximately: (2) Locations = 300 L.F. @ $_____/L.F. = $_____
TOTAL

B) **6-inch x 6-inch Aluminum Gutter**

a) Small Roof Repair Area:
0 S.F. - 500 S.F.
Approximately: (3) Locations = 100 L.F. @ $_____/L.F. = $_____
TOTAL

b) Medium to Large Roof Repair Area
501 S.F. and Up
Approximately: (2) Locations = 300 L.F. @ $_____/L.F. = $_____

ITEM 36: Furnish all materials, labor, and equipment to install rigid standard ridge vent, high density polypropylene or UV-stabilized plastic.

a) Small Roof Repair Area:
0 S.F. - 500 S.F.
Approximately: (3) Locations = 100 L.F. @ $_____/L.F. = $_____
TOTAL

b) Medium to Large Roof Repair Area
501 S.F. and Up.
Approximately: (2) Locations = 300 L.F. @ $_____/L.F. = $_____
TOTAL

ITEM 37: Furnish all materials, labor, and equipment to install glass fiber reinforced asphalt shingles, mineral-granular surfaced self-sealing.

a) Small Roof Repair Area:

0 S.F. - 500 S.F.
Approximately: (3) Locations = 1,500 S.F @ $_____/S.F. = $_____
TOTAL

b) Medium to Large Roof Repair Area
501 S.F. and Up.
Approximately: (2) Locations = 2,000 S.F @ $_____/S.F. = $_____
TOTAL

PROPOSAL (Continued) PROJECT 11926

ITEM 38: Furnish all materials, labor, and equipment to install 20 oz. Copper shingles 34-inches x 12-inches, 2 clips per panel.

a) Small Roof Repair Area:
0 S.F. - 500 S.F..
*Approximately: (3) Locations = 1,500 S.F @ **$**_____**/S.F.** = $_____*
TOTAL

b) Medium to Large Roof Repair Area
501 S.F. and Up.
*Approximately: (2) Locations = 2,000 S.F @ **$**_____**/S.F.** = $_____*
TOTAL

ITEM 39: Furnish all materials, labor, and equipment to install galvanized steel sheet, .0276 inch with siliconized polyester coating.

A) **Standing Seam**

a) Small Roof Repair Area:
0 S.F. - 500 S.F.
*Approximately: (3) Locations = 1,500 S.F @ **$**_____**/S.F.** = $_____*
TOTAL

b) Medium to Large Roof Repair Area
501 S.F. and Up
*Approximately: (2) Locations = 2,000 S.F @ **$**_____**/S.F.** = $_____*
TOTAL

B) **Batten Seam**

a) Small Roof Repair Area:
0 S.F. - 500 S.F.
*Approximately: (3) Locations = 1,500 S.F @ **$**_____**/S.F.** = $_____*
TOTAL

b) Medium to Large Roof Repair Area
501 S.F. and Up
*Approximately: (2) Locations = 2,000 S.F @ **$**_____**/S.F.** = $_____*
TOTAL

ITEM 40: Furnish all materials, labor, and equipment to install aluminum sheet, coil coated alloy, .040 inch with siliconized polyester coating.

A) **Standing Seam**

a) Small Roof Repair Area:
0 S.F. - 500 S.F.
*Approximately: (3) Locations = 1,500 S.F @ **$**_____**/S.F.** = $_____*
TOTAL

b) Medium to Large Roof Repair Area
501 S.F. and Up

*Approximately: (2) Locations = 2,000 S.F @ **$**_____**/S.F.** = $_____*
TOTAL

PROPOSAL (continued) PROJECT 11926

Item 40 (continued)

B) **Batten Seam**

a) Small Roof Repair Area:
0 S.F. - 500 S.F.
Approximately: (3) Locations = 1,500 S.F @ $_____/S.F. = $_____
TOTAL

b) Medium to Large Roof Repair Area
501 S.F. and Up
Approximately: (2) Locations = 2,000 S.F @ $_____/S.F. = $_____
TOTAL

C) **Flat Seam**

b) Small Roof Repair Area:
0 S.F. - 500 S.F.
Approximately: (3) Locations = 1,500 S.F @ $_____/S.F. = $_____
TOTAL

b) Medium to Large Roof Repair Area
501 S.F. and Up
Approximately: (2) Locations = 2,000 S.F @ $_____/S.F. = $_____
TOTAL

D) **Ridged Metal Building Roofing (Through Metal Building Manufacturer)**

c) Small Roof Repair Area:
0 S.F. - 500 S.F.
Approximately: (3) Locations = 1,500 S.F @ $_____/S.F. = $_____
TOTAL

b) Medium to Large Roof Repair Area
501 S.F. and Up
Approximately: (2) Locations = 2,000 S.F @ $_____/S.F. = $_____
TOTAL

ITEM 41: Furnish all materials, labor, and equipment to install clay roof tile.

A) **Spanish "S" Tile**

a) Small Roof Repair Area:
0 S.F. - 500 S.F.
Approximately: (3) Locations = 1,500 S.F @ $_____/S.F. = $_____
TOTAL

b) Medium to Large Roof Repair Area
501 S.F. and Up

Item 41 (continued)

Approximately: (2) Locations = 2,000 S.F @ $_____/S.F. = $_____
TOTAL

PROPOSAL (continued) PROJECT 11926

Item 41 (continued)

B) **Barrel Tile**

a) Small Roof Repair Area:
0 S.F. - 500 S.F.
*Approximately: (3) Locations = 1,500 S.F @ **$**_____**/S.F.** = $_____*
TOTAL

b) Medium to Large Roof Repair Area
501 S.F. and Up
*Approximately: (2) Locations = 2,000 S.F @ **$**_____**/S.F.** = $_____*

ITEM 42: Furnish all materials, labor, and equipment to install 4" diameter leader.

A) **24 Gauge Galvanized Steel**

a) Small Roof Repair Area:
0 S.F. - 500 S.F.
*Approximately: (3) Locations = 100 L.F. @ **$**_____**/L.F.** = $_____*
TOTAL

b) Medium to Large Roof Repair Area
501 S.F. and Up
*Approximately: (2) Locations = 300 L.F. @ **$**_____**/L.F.** = $_____*
TOTAL

B) **Anodized Aluminum**

a) Small Roof Repair Area:
0 S.F. - 500 S.F.
*Approximately: (3) Locations = 100 L.F. @ **$**_____**/L.F.** = $_____*
TOTAL

b) Medium to Large Roof Repair Area
501 S.F. and Up
*Approximately: (2) Locations = 300 L.F. @ **$**_____**/L.F.** = $_____*
TOTAL

C) **24 Gauge Stainless Steel**

a) Small Roof Repair Area:
0 S.F. - 500 S.F.
*Approximately: (3) Locations = 100 L.F. @ **$**_____**/L.F.** = $_____*
TOTAL

b) Medium to Large Roof Repair Area
501 S.F. and Up
*Approximately: (2) Locations = 300 L.F. @ **$**_____**/L.F.** = $_____*
TOTAL
TOTAL

ITEM 43: Furnish all materials, labor, and equipment to install concrete roof tile.

PROPOSAL (continued) PROJECT 11926

Item 43 (continued)

A) **Spanish "S" Tile**

a) Small Roof Repair Area:
0 S.F. - 500 S.F.
Approximately: (3) Locations = 1,500 S.F @ $_____/S.F. = $_____
TOTAL

b) Medium to Large Roof Repair Area
501 S.F. and Up
Approximately: (2) Locations = 2,000 S.F @ $_____/S.F. = $_____
TOTAL

B) **Flat Shingle**

a) Small Roof Repair Area:
0 S.F. - 500 S.F.
Approximately: (3) Locations = 1,500 S.F @ $_____/S.F. = $_____
TOTAL

b) Medium to Large Roof Repair Area
501 S.F. and Up
Approximately: (2) Locations = 2,000 S.F @ $_____/S.F. = $_____
TOTAL

ITEM 44: Supplies not listed or included elsewhere MAY be purchased under this contract on a strictly COST-PLUS arrangement only. Documentation of vendor cost must be provided with written (City) estimates. Provide percent markup. City staff estimates approximately $25,000 worth of this type of material will be required per year.

$25,000 x %___ = $_____
TOTAL

ITEM 45: Crane Rental ALLOWANCE – based upon receipts.

ALLOWANCE $ 20,000.00
TOTAL

ITEM 46: As a requirement by the manufacturer, annual inspections of all roof types are required in order to maintain each specific Roof Warranty. Warranty required by the City of Fort Lauderdale is Minimum 20 year, no dollar limit. This requires documentation as outlined by the individual Manufacturer. Therefore, costs to maintain individual Warranties, regardless of roof type, shall be included among the hard costs. Furnish all materials, labor, and equipment to provide Roofing Warranty Inspections on a yearly basis as required by Manufacturer, all Roof types.

PROPOSAL (continued) PROJECT 11926

Item 46 (continued)

Medium to Large Roof Inspection Area

1000 S.F. and Up.
*Approximately: (6) Locations = 6,000 S.F @ **$**_____**/S.F.** = $*_____
TOTAL

TOTAL BID: $_____
(FIGURES)

_____
(TOTAL WRITTEN DOLLAR AMOUNT)

The City of Fort Lauderdale reserves the right to waive any informality in any bid and to reject any or all bids. The City of Fort Lauderdale reserves the right to reduce or delete any of the above items.

At time of award of contract, the City reserves the right to set a maximum dollar limit that may be expended on this project. Contract quantities of any or all items may be increased, reduced, or eliminated to adjust the contract amount to coincide with the amount of work necessary or to bring the contract value to within the established limit. All quantities are estimated and the City reserves the right to increase, reduce, or eliminate the contract quantities in any amount.

CONTRACT TIME

1.1 The Contractor recognizes that **TIME IS OF THE ESSENCE**. The Work shall commence within **30** calendar days of the date of the Notice to Proceed.

1.2 The Work shall be Substantially Completed within _____ calendar days after the date when the Contract Time commences to run as provided in the Notice to Proceed. **N/A**

1.3 The Work shall be finally completed on the Final Completion Date and ready for final payment in accordance with this Agreement within _____ calendar days after the date when the Contract Time commences to run as provided in the Notice to Proceed. **N/A**

1.4 The initial contract term shall commence upon date of award by the City, and shall expire **1** year from that date. The City reserves the right to extend the contract for **3**, additional **1** year terms, providing all terms conditions and specifications remain the same, both parties agree to the extension, and such extension is approved by the City.

1.5 In the event services are scheduled to end because of the expiration of this contract, the Contractor shall continue the service upon the request of the City as authorized by the awarding authority. The extension period shall not extend for more than ninety (90) days beyond the expiration date of the existing contract. The Contractor shall be compensated for the service at the rate in effect when this extension clause is invoked by the City.

Rev. 9/27/2013

PROPOSAL (Continued) PROJECT 11926

The work described below includes all the necessary excavations, fill and removal of materials attendant upon the construction of the work complete in place, and the disposal of all excess material and the final cleaning up of the work.

State the true, exact, correct and complete name of the partnership, corporation, or trade name under which you do business, and the address of the place of business (Post Office Box is inappropriate). IF A CORPORATION, state the name of the President, Secretary and Resident Agent. IF A PARTNERSHIP, state the names of all partners. IF A TRADE NAME, state the names of the individuals who do business under the trade name. If the firm is a foreign corporation (i.e., non-Florida), it must be authorized to do business in the State of Florida by the Florida Secretary of State. PLEASE PRINT OR TYPE.

Firm Name: _____

Address: _____

_____

Telephone: _____ Fax: _____

E-Mail Address: _____

_____
(Name) (Title)

_____
(Name) (Title)

_____
(Name) (Title)

_____

(Attach additional sheets, if necessary).

The undersigned bidder acknowledges that he may be required to furnish additional information as deemed necessary by the Office of the City Engineer, Public Works Department (Engineering and Architectural Services), to update their records should he be awarded the work described below.

The undersigned bidder affirms that he has or will obtain all equipment necessary to complete the work described, that he has or will obtain all required permits and licenses from the appropriate agencies, and that his firm is authorized to do business in the State of Florida.

The undersigned bidder has not divulged to, discussed, or compared this bid with other bidders, and has not colluded with any other bidder or parties to a bid whatsoever. Further, the undersigned guarantees the truth and accuracy of all statements and answers contained in this proposal.

PROPOSAL (Continued) PROJECT 11926

The initial contract term shall commence upon date of award by the City and shall expire one (1) year from that date. The City reserves the right to extend the contract for three (3), additional one-year terms, providing all terms conditions and specifications remain the same, both parties agree to the extension, and such extension is approved by the City.

In the event services are scheduled to end because of the expiration of this contract, the Contractor shall continue the service upon the request of the City as authorized by the awarding authority. The extension period shall not extend for more than ninety (90) days beyond the expiration date of the existing contract. The Contractor shall be compensated for the service at the rate in effect when this extension clause is invoked by the City.

The undersigned acknowledges receipt of the Addenda listed below (if applicable) and further acknowledges that the provisions of each Addendum have been included in the preparation for this Bid.

Addendum No.	Date Received	Addendum No.	Date Received

DATE: _____ FOR: _____

_____ BY: _____
(Witness – Print or type name) (Signature)

Seal:

_____
(Witness – Print or type name) TITLE: President ☐ Vice-President ☐

Rev. 10/1/2013

PROJECT 11926

QUESTIONNAIRE SHEET

PLEASE PRINT OR TYPE:

Firm Name: _____

President _____

Business Address: _____

Telephone: _____ Fax: _____

E-Mail Address: _____

What was the last project of this nature which you completed?

_____

_____

The following are named as three corporations and representatives of those corporations for which you have performed work and which the City may contact as your references (include addresses and telephone numbers):

_____

_____

_____

How many years has your organization been in business?_____

Have you ever failed to complete work awarded to you; if so, where and why?

_____

The name of the qualifying agent for the firm and his position is:_____

Certificate of Competency Number of Qualifying Agent:_____

Effective Date:_____ Expiration Date:_____

Licensed in:_____ Engineering Contractor's License #_____
(County/State)

Expiration Date:_____

NOTE: To be considered for award of this contract, the bidder must submit a financial statement upon request. A Broward County Engineering Contractor's License and/or the appropriate license issued by the State of Florida is required for working within public rights-of-way. Contractor must have proper licensing prior to submitting bid and must submit evidence of same with bid.

Rev. 2/15/11

PROJECT 11926

QUESTIONNAIRE SHEET

1. Have you personally inspected the proposed work and have you a complete plan for its performance?

_____

_____

_____

2. Will you sublet any part of this work? If so, list the portions or specialties of the work that you will.

a) _____

b) _____

c) _____

d) _____

e) _____

f) _____

g) _____

3. What equipment do you own that is available for the work?

_____

_____

_____

4. What equipment will you purchase for the proposed work?

_____

_____

_____

5. What equipment will you rent for the proposed work?

_____

_____

_____

Rev. 8/14/2008

LOCAL BUSINESS PREFERENCE

Section 2-199.2, Code of Ordinances of the City of Fort Lauderdale, (Ordinance No. C-12-04), provides for a local business preference.

In order to be considered for a local business preference, a bidder must include the Local Business Preference Certification Statement of this ITB, as applicable to the local business preference class claimed **at the time of bid submittal**:

Upon formal request of the City, based on the application of a Local Business Preference the Bidder shall within ten (10) calendar days submit the following documentation to the Local Business Preference Class claimed:

A) Copy of City of Fort Lauderdale current year business tax receipt, **or** Broward County current year business tax receipt, **and**

B) List of the names of all employees of the bidder and evidence of employees' residence within the geographic bounds of the City of Fort Lauderdale or Broward County, as the case may be, such as current Florida driver license, residential utility bill (water, electric, telephone, cable television), or other type of similar documentation acceptable to the City.

Failure to comply at time of bid submittal shall result in the bidder being found ineligible for the local business preference.

THE COMPLETE LOCAL BUSINESS PREFERENCE ORDINANCE MAY BE FOUND ON THE CITY'S WEB SITE AT THE FOLLOWING LINK: http:/www.fortlauderdale.gov/purchasing/index.htm

Definitions: The term "Business" shall mean a person, firm, corporation or other business entity which is duly licensed and authorized to engage in a particular work in the State of Florida. Business shall be broken down into four (4) types of classes:

1. Class A Business – shall mean any Business that has established and agrees to maintain a permanent place of business located in a non-residential zone and staffed with full-time employees within the limits of the City **and** shall maintain a staffing level of the prime contractor for the proposed work of at least fifty percent (50%) who are residents of the City.
2. Class B Business - shall mean any Business that has established and agrees to maintain a permanent place of business located in a non-residential zone and staffed with full-time employees within the limits of the City **or** shall maintain a staffing level of the prime contractor for the proposed work of at least fifty percent (50%) who are residents of the City.
3. Class C Business - shall mean any Business that has established and agrees to maintain a permanent place of business located in a non-residential zone **and** staffed with full-time employees within the limits of Broward County.
4. Class D Business – shall mean any Business that does not qualify as either a Class A, Class B, or Class C business.

LOCAL BUSINESS PREFERENCE CERTIFICATION STATEMENT

The Business identified below certifies that it qualifies for the local BUSINESS preference classification as indicated herein, and further certifies and agrees that it will re-affirm its local preference classification annually no later than thirty (30) calendar days prior to the anniversary of the date of a contract awarded pursuant to this ITB. Violation of the foregoing provision may result in contract termination.

(1) _____ Business Name is a **Class A** Business as defined in City of Fort Lauderdale Ordinance No. C-12-04, Sec.2-199.2. A copy of the City of Fort Lauderdale current year Business Tax Receipt **and** a complete list of full-time employees and their addresses shall be provided within 10 calendar days of a formal request by the City.

(2) _____ Business Name is a **Class B** Business as defined in the City of Fort Lauderdale Ordinance No. C-12-04, Sec.2-199.2. A copy of the Business Tax Receipt **or** a complete list of full-time employees and their addresses shall be provided within 10 calendar days of a formal request by the City.

(3) _____ Business Name is a **Class C** Business as defined in the City of Fort Lauderdale Ordinance No. C-12-04, Sec.2-199.2. A copy of the Broward County Business Tax Receipt shall be provided within 10 calendar days of a formal request by the City.

(4) _____ Business Name requests a **Conditional Class A** classification as defined in the City of Fort Lauderdale Ordinance No. C-12-04, Sec.2-199.2. Written certification of intent shall be provided within 10 calendar days of a formal request by the City.

(5) _____ Business Name requests a **Conditional Class B** classification as defined in the City of Fort Lauderdale Ordinance No. C-12-04, Sec.2-199.2. Written certification of intent shall be provided within 10 calendar days of a formal request by the City.

(6) _____ Business Name is considered a **Class D** Business as defined in the City of Fort Lauderdale Ordinance No. C-12-04, Sec.2-199.2. and does not qualify for Local Preference consideration.

BIDDER'S COMPANY: _____

AUTHORIZED COMPANY PERSON: _____
NAME SIGNATURE DATE

Rev. 9/24/2013

CITY OF FORT LAUDERDALE
PUBLIC WORKS DEPARTMENT

MINORITY BUSINESS ENTERPRISE (MBE) - WOMEN BUSINESS ENTERPRISE (WBE)

PRIME CONTRACTOR IDENTIFICATION FORM

In order to assist us in identifying the status of those companies doing business with the City of Fort Lauderdale, this form must be completed and returned with your bid package.

Name of Firm: _____

Address of Firm: _____

Telephone Number: _____

Name of Person Completing Form: _____

Title: _____

Signature: _____

Date: _____

City Project Number: _____

City Project Description: _____

Please check the item(s) which properly identify the status of your firm:

☐ Our firm is not a MBE or WBE.

☐ Our firm is a MBE, as at least 51 percent is owned and operated by one or more socially and economically disadvantaged individuals.

☐ American Indian ☐ Asian ☐ Black ☐ Hispanic

☐ Our firm is a WBE, as at least 51 percent is owned and operated by one or more women.

☐ American Indian ☐ Asian ☐ Black ☐ Hispanic

Rev.08/14/2008

MBE/WBE CONTRACTOR INFORMATION

The City, in a continuing effort, is encouraging the increased participation of minority and women-owned businesses in Public Works Department (Engineering and Architectural Services) related contracts. Along those lines, we are requiring that each firm provide documentation detailing their own programs for utilizing minority and women-owned businesses.

Your firm should submit this information as a part of this bid package and refer to the checklist, to ensure that all areas of concern are covered. The low responsive bidder will be contacted to schedule a meeting to discuss these objectives. It is our intention to proceed as quickly as possible with this project, so your cooperation in this matter is appreciated.

CONTRACTOR CHECKLIST

☐ List Previous City of Fort Lauderdale Contracts

☐ Number of Employees in your firm
--Percent (%) Women
--Percent (%) Minorities
--Job Classifications of Women and Minorities

☐ Use of minority and/or women subcontractors on past projects.

☐ Nature of the work subcontracted to minority and/or women-owned firms.

☐ How are subcontractors notified of available opportunities with your firm?

☐ Anticipated amount to be subcontracted on this project.

☐ Anticipated amount to be subcontracted to minority and/or women-owned businesses on this project.

Rev.12/05/2012

NON-COLLUSION STATEMENT:

By signing this offer, the vendor/contractor certifies that this offer is made independently and *free* from collusion. Vendor shall disclose below any City of Fort Lauderdale, FL officer or employee, or any relative of any such officer or employee who is an officer or director of, or has a material interest in, the vendor's business, who is in a position to influence this procurement.

Any City of Fort Lauderdale, FL officer or employee who has any input into the writing of specifications or requirements, solicitation of offers, decision to award, evaluation of offers, or any other activity pertinent to this procurement is presumed, for purposes hereof, to be in a position to influence this procurement.

For purposes hereof, a person has a material interest if they directly or indirectly own more than 5 percent of the total assets or capital stock of any business entity, or if they otherwise stand to personally gain if the contract is awarded to this vendor.

In accordance with City of Fort Lauderdale, FL Policy and Standards Manual, 6.10.8.3,

3.3. City employees may not contract with the City through any corporation or business entity in which they or their immediate family members hold a controlling financial interest (e.g. ownership of five (5) percent or more).

3.4. Immediate family members (spouse, parents and children) are also prohibited from contracting with the City subject to the same general rules.

Failure of a vendor to disclose any relationship described herein shall be reason for debarment in accordance with the provisions of the City Procurement Code.

NAME	RELATIONSHIPS
_____	_____
_____	_____
	_____
	_____

In the event the vendor does not indicate any names, the City shall interpret this to mean that the vendor has indicated that no such relationships exist.

CITY OF FORT LAUDERDALE
CONSTRUCTION AGREEMENT

THIS AGREEMENT made and entered into this _____ day of _____, 20__, by and between the City of Fort Lauderdale, a Florida municipal corporation (City) and _____, (Contractor), (parties);

WHEREAS, the City desires to retain a contractor for the Project as expresses in its Invitation to Bid/Request for Proposals No._____, which was opened on _____; and,

WHEREAS, the Contractor has expresses its willingness and capability to perform the necessary work to accomplish the Project.

NOW, THEREFORE, the City and the Contractor, in consideration of the mutual covenants and conditions contained herein and for other good and valuable consideration, the receipt and sufficiency is hereby acknowledged, agree as follows:

ARTICLE 1 – DEFINITIONS

Whenever used in this Agreement or in other Contract Documents, the following terms have the meanings indicated which are applicable to both the singular and plural forms:

1.1 Agreement – This written agreement between the City and the Contractor covering the work to be performed including other Contract Documents that are attached to or incorporated in the Agreement.

1.2 Application for Payment – The form accepted by the City which is to be used by the Contractor in requesting progress or final payment and which is to include such supporting documentation as is required by the Contract Documents

1.3 Approve – The word approve is defined to mean review of the material, equipment or methods for general compliance with design concepts and with the design concepts and with the information given in the Contract Documents. It does not imply a responsibility on the part of the City to verify in every detail conformance with plans and specifications.

1.4 Bid – The offer or Bid of the Contractor submitted on the prescribed form setting forth the total prices for the Work to be performed.

1.5 Bid Documents –This Agreement, advertisement for Invitation to Bids, the Instructions to Bidders, the Bid Form (with supplemental affidavits and agreements), the Contract Forms, General Conditions, the Supplementary Conditions, the Specifications, and the Plans, which documents all become an integral part of the Contract Documents.

1.6 Certificate of Substantial Completion - Certificate provided by the City certifying that all Work, excluding the punch list items, has been completed, inspected, and accepted by the City.

SAMPLE CONSTRUCTION AGREEMENT

1.7 Change Order - A written order to the Contractor signed by the City authorizing an addition, deletion or revision in the Work, or an adjustment in the Contract Price or the Contract time issued on or after the Effective Date of the Agreement.

1.8 City – The City of Fort Lauderdale, Florida including but not limited to its employees, agents, officials, representative, contractors, subcontractors, volunteers, successors and assigns, with whom the Contractor has entered into the Agreement and for whom the Work is to be provided. The Project Manager, or designee, shall be the authorized agent for the City unless otherwise specified.

1.9 Contract Documents – The Contract Documents shall consist of this Agreement, the Drawings, Plans and Specifications, Notice to Proceed, Certificate(s) of Insurance, Payment and Performance Bonds and any additional documents that are required to be submitted under the Agreement, and all amendments, modifications and supplements, change orders and work directive changes issued on or after the Effective Date of the Agreement.

1.10 Contract Price – The monies payable to the Contractor by the City under the Contract Documents and in accordance with the line item unit prices listed in the Bid.

1.11 Contract Time – The number of calendar days stated in the Agreement for the completion of the Work. The dates on which the work shall be started and shall be completed as stated in the Notice to Proceed.

1.12 Contractor – The person, firm, company, or corporation with whom the City has entered into the Agreement, including but not limited to its employees, agents, representatives, contractors, subcontractors, their subcontractors and their other successors and assigns.

1.13 Day – A calendar day of twenty-four (24) hours ending at midnight.

1.14 Defective – An adjective which when modifying the work "Work" refers to work that is unsatisfactory, faulty, or deficient, or does not conform to the Contract Documents or does not meet the requirements of any inspection, test or approval referred to in the Contract Documents, or has been damaged prior to the Project Manager's recommendation of final payment.

1.15 Effective Date of the Agreement – Means the date on which the agreement is approved by the City Commission or _____, whichever is later.

1.16 Final Completion Date – The date the Work is completed, including completion of the final punch list, and delivered along with those items specified in the Contract Documents and is accepted by the City.

1.17 Hazardous Materials (HAZMAT) - Any solid, liquid, or gaseous material that is toxic, flammable, radioactive, corrosive, chemically reactive, or unstable upon prolonged storage in quantities that could pose a threat to life, property, or the environment defined in Section 101(14) of Comprehensive Environmental Response, Compensation and Liability Act of 1980 and in 40 CFR 300.6). Also defined by 49 CFR

SAMPLE CONSTRUCTION AGREEMENT

171.8 as a substance or material designated by the Secretary of Transportation to be capable of posing an unreasonable risk to health, safety, and property when transported in commerce and which has been so designated.

1.18 Hazardous Substance - As defined by Section 101(14) of the Comprehensive Environmental Response, Compensation and Liability Act; any substance designated pursuant to Section 311(b) (2) (A) of the Clean Water Act; any element, compound, mixture, solution or substance designated pursuant to Section 102 identified under or listed pursuant to Section 3001 of the Solid Waste Disposal Act {but not including any waste listed under Section 307[a] of the Clean Water Act}; any hazardous air pollutant listed under Section 112 of the Clean Air Act; and any imminently hazardous chemical substance or mixture pursuant to Section 7 of the Toxic Substances Control Act. The term does not include petroleum, including crude oil or any fraction thereof, which is not otherwise specifically listed or designated as a hazardous substance in the first sentence of this paragraph, and the term does not include natural gas, natural gas liquids, liquefied natural gas, or synthetic gas usable for fuel (or mixtures of natural gas and such synthetic gas}.

1.19 Hazardous Waste - Those solid wastes designated by OSHA in accordance with 40 CFR 261 due to the properties of ignitability, corrosivity, reactivity, or toxicity. Any material that is subject to the Hazardous Waste Manifest requirements of the EPA specified in 40 CFR Part 262.

1.20 Holidays - Those designated non-work days as established by the City Commission of the City of Fort Lauderdale.

1.21 Inspection – The term "inspection" and the act of inspecting as used in this Agreement is defined to mean the examination of construction to ensure that it conforms to the design concept expressed in the plans and specifications. This term shall not be construed to mean supervision, superintending and/or overseeing.

1.22 Notice of Award - The written notice by City to the Contractor stating that upon compliance by the Contractor with the conditions precedent enumerated therein, within the time specified that the City will sign and deliver this Agreement.

1.23 Notice to Proceed – A written notice given by the City to the Contractor fixing the date on which the Contract Time will commence to run and on which the Contract Time will end.

1.24 Plans - The drawings which show the character and scope of the work to be performed and which have been prepared or approved by the City and are referred to in the Contract Documents.

1.25 Premises (otherwise known as Site or Work Site) – means the land, buildings, facilities, etc. upon which the Work is to be performed.

1.26 Project – The total construction of the Work to be provided as defined in the Contract Documents.

SAMPLE CONSTRUCTION AGREEMENT

1.27 Project Manager - The employee of the City, or other designated individual who is herein referred to as the Project Manager, will assume all duties and responsibilities and will have the rights and authorities assigned to the Project Manager in the contract Documents in connection with completion of the Work in accordance with this Agreement.

1.28 Punch List - The City's list of Work yet to be done or be corrected by the Contractor, before the Final Completion date can be determined by the City.

1.29 Record Documents - A complete set of all specifications, drawings, addenda, modifications, shop drawings, submittals and samples annotated to show all changes made during the construction process.

1.30 Record Drawings or "As-Builts" - A set of drawings which show significant changes in the work made during construction and which are usually based on drawings marked up in the field and other data furnished by the contractor. These documents will be signed and sealed by the Engineer of Record or a Professional Land Surveyor licensed in the State of Florida.

1.31 Substantially Completed Date – A date when the Contractor has requested in writing, stating that the Work is substantially completed and is ready for an inspection and issuance of a final punch list for the Project.

1.32 Work – The entire completed delivered product or the various separately identifiable parts thereof required to be furnished under the Contract Documents. Work is the result of performing services, furnishing labor and furnishing and incorporating material and equipment into the product, all as required by the Contract Documents.

SAMPLE CONSTRUCTION AGREEMENT

ARTICLE 2 – SCOPE OF WORK

2.1 The Contractor shall complete all work as specified or indicated in the Contract Documents. The Project for which the Work under the Contract Documents may be the whole or only part is generally described as follows:

ANNUAL ROOFING REPAIR AND REPLACEMENT CITY-WIDE
ITB 243-11292 PROJECT 11926

2.2 All Work for the Project shall be constructed in accordance with the Drawings and Specifications. The Work generally involves:

PROJECT DESCRIPTION

The work includes repairs to City owned buildings associated with roofing, re-roofing and roof repair components for various locations within the City of Fort Lauderdale All items are based on a complete systems i.e. 4-ply SBS modified bitumen system (granular cap sheet). All installations shall meet all State of Florida requirements and Miami-Dade Notice of Acceptance (NOA) for high velocity. Please also refer to the typical Detail Drawings sections of this package.

Two (2) or Three (3) levels of work scope are indicated for most of the Proposal items. Small repair jobs from 0 to 500 square feet (S.F.), medium size roofing jobs 501 to 10,000 S.F., and large roofing jobs over 10,001 S.F. All proposal line items shall include maintenance, insurance, overhead, and other fixed costs. All Bidders shall have a State of Florida Roofing and General Contractor's licenses. Contractor to be Lightning Protection Certified and maintain an in-house Safety Officer.

2.3 Within ten (10) days of the execution of this Agreement, the Contractor shall submit a Construction Schedule, Schedule of Values and a listing of those subcontractors that will be utilized by the Contractor. The general sequence of the work shall be submitted by the Contractor and approved by the City before any work commences. The City reserves the right to issue construction directives necessary to facilitate the Work or to minimize any conflict with operations.

ARTICLE 3 – PROJECT MANAGER

3.1 The Project Manager is hereby designated by the City as Scott Sundermeier whose address is 100 N. Andrews Avenue, 4th Floor, Fort Lauderdale, FL 33301. The Project Manager will assume all duties and responsibilities and will have the rights and authorities assigned to the Project Manager in the Contract Documents in connection with completion of the Work in accordance with this Agreement.

ARTICLE 4 – CONTRACT DOCUMENTS

The Contract Documents which comprise the entire Agreement between the City and Contractor are attached to this Agreement, are made a part hereof and consist of the following:

4.1 This Agreement.

4.2 Exhibits to this Agreement (Plans (sheets [ ] to [ ] inclusive)).

4.3 Public Construction Bond, Performance Bond, Payment Bond and Certificates of Insurance.

4.4 Notice of Award and Notice to Proceed.

4.5 General Conditions as amended by the Special Conditions.

4.6 Technical Specifications.

4.7 Plans

4.8 Addenda number_____ through _____, inclusive.

4.9 Bid Form and supplement Affidavits and Agreements.

4.10 All applicable provisions of State and Federal Law and any modification, including Change Orders or written amendments duly delivered after execution of Agreement.

SAMPLE CONSTRUCTION AGREEMENT

4.11 Invitation to Bid No. _____, Instructions to Bidders and Bid Bond.

4.12 Contractor's response to the City's Invitation to Bid No. _____ date_____.

4.13 Schedule of Completion and Schedule of Values.

4.14 Permits on file with the City and or those permits to be obtained shall be considered directive in nature and will be considered a part of this Agreement. A copy of all permits shall be given to the City for inclusion in the Contract Documents. Terms of permits shall be met prior to acceptance of the Work and release of the final payment.

There are not Contract Documents other than those listed in this Article 4. The Contract Documents may only be altered, amended, or repealed in accordance with the provisions of the terms of this Agreement.

In the event of any conflict between the documents or any ambiguity or missing specification or instruction, the following priority is established:

a. Specific direction from the City Manager (or designee)

b. This Agreement dated _____ and any attachments.

c. Invitation to Bid No. _____ and the specifications prepared by the City.

d. Contractor's response to the City's Invitation to Bid No. _____date _____.

e. Schedule of Values.

f. Schedule of Completion.

If during the performance of the Work, Contractor finds a conflict, error or discrepancy in the Contract Documents, Contractor shall so report to the Project Manager, in writing, at once and before proceeding with the Work affected shall obtain a written interpretation or clarification from the City.

It is the intent of the specifications and plans to describe a complete Project to be constructed in accordance with the Contract Documents. Any Work that may reasonably be inferred from the specifications or plans as being required to produce the intended result shall be supplied whether or not it is specifically called for. When words which have a well-known technical or trade meaning are used to describe Work, materials, or equipment, such works shall be interpreted in accordance with such meaning. Reference to standard specifications, manuals or codes of any technical society, organization or associations, or to the code of any governmental authority whether such reference be specific or implied, shall mean the latest standard specification, manual or code in effect as of the Effective Date of this Agreement, except as may be otherwise specifically stated. However, no provision of any referenced

SAMPLE CONSTRUCTION AGREEMENT

standard specification, manual or code (whether or not specifically incorporated by reference in the Contract Documents) shall change the duties and responsibilities of the City, the Contractor, or any of their agents or employees from those set forth in the Contract Documents.

ARTICLE 5 – CONTRACT TIME

5.1 The Contractor recognizes that **TIME IS OF THE ESSENCE**. Each work order shall commence within **30** calendar days of the date of the Notice to Proceed.

5.2 The Work shall be Substantially Completed within _____ calendar days after the date when the Contract Time commences to run as provided in the Notice to Proceed. **N/A**

5.3 The Work shall be finally completed on the Final Completion Date and ready for final payment in accordance with this Agreement within _____ calendar days after the date when the Contract Time commences to run as provided in the Notice to Proceed. **N/A**

5.4 The initial contract term shall commence upon date of award by the City and shall expire _**1**_ years from that date. The City reserves the right to extend the contract for _**3**_, additional _**1**_ year terms, providing all terms conditions and specifications remain the same, both parties agree to the extension, and such extension is approved by the City.

5.5 In the event services are scheduled to end because of the expiration of this contract, the Contractor shall continue the service upon the request of the City as authorized by the awarding authority. The extension period shall not extend for more than ninety (90) days beyond the expiration date of the existing contract. The Contractor shall be compensated for the service at the rate in effect when this extension clause is invoked by the City.

ARTICLE 6 – CONTRACT PRICE

6.1 City shall pay Contractor for performance of the Work in accordance with Article 7, subject to additions and deletions by Change Order, as provided for in this Agreement.

6.2 The parties expressly agree that the Contract Price in the not to exceed amount of $_____ constitutes the total maximum compensation payable to Contractor for performing the Work, plus any Work done pursuant to a Change Order. The Contract Price is in accordance with the line item unit prices listed in the Bid. Line items are based on a unit price cost multiplied by a defined quantity. Any additional duties, responsibilities and obligations assigned to or undertaken by Contractor shall be at Contractor's expense without change to the Contract Price.

6.3 The Contract Price constitutes the compensation payable to Contractor for performing the Work plus any Work done pursuant to a Change Order. All duties responsibilities

SAMPLE CONSTRUCTION AGREEMENT

and obligations assigned to or undertaken by Contractor shall be at Contractor's expense without change in the Contract price.

ARTICLE 7 – PAYMENT PROCEDURES

7.1 Contractor shall submit Applications for Payment in accordance with the Contract Documents. Applications for Payment will be processed by City as provided in the General Conditions.

7.2 Progress Payments. City shall make progress payments on account of the Contract Price on the basis of Contractor's monthly Applications for Payment, which shall be submitted by the Contractor between the first (1st) and the tenth (10th) day after the end of each calendar month for which payment is requested. All progress payments will be made on the basis of the progress of the Work completed.

7.3 Prior to Final Completion, progress payments will be made in an amount equal to ninety percent (90%) of the value of Work completed less in each case the aggregate of payments previously made.

7.4 Final Payment. Upon final completion of the Work in accordance with the General Conditions, as may be supplemented, the City shall pay Contractor an amount sufficient to increase total payments to one-hundred percent (100%) of the Contract Price. However, not less than ten percent (10%) of the Contract Price shall be retained until Record Drawings (as-builts), specifications, addenda, modifications and shop drawings. Including all manufacturers' instructional and parts manuals are delivered to and accepted by the City.

7.5 The City shall make payment to the Contractor in accordance with the Florida Prompt Payment Act, Section 218.70, Florida Statutes.

7.6 The City shall make payment to the Contractor through utilization of the City's P-Card Program.

ARTICLE 8 – CONTRACTOR'S REPRESENTATIONS

In order to induce the City to enter into this Agreement, Contractor makes the following representations upon which the City has relied:

8.1 Contractor is qualified on the field of public construction and in particular to perform the Work and services set forth in this Agreement.

8.2 Contractor has visited the Work Site has conducted extensive tests, examinations and investigations and represents and warrants a thorough familiarization with the nature and extent of the Contract Documents, the Work, locality, soil conditions, moisture conditions and all year-round local weather and climate conditions (past and present), and, in reliance on such tests, examination and investigations conducted by Contractor and the Contractor's experts, has determined that no conditions exist that would in any manner affect the Proposed Price and that the project can be completed for the

SAMPLE CONSTRUCTION AGREEMENT

Proposed Price submitted. Furthermore, Contractor warrants and confirms that he is totally familiar with, understands and obligates Contractor to comply with all federal, state and local laws, ordinances, rules, regulations and all market conditions that affect or may affect the cost and price of materials and labor needed to fulfill all provisions of this Agreement or that in any manner may affect cost, progress or performance of the Work.

8.3 The Contractor has satisfied itself as to the nature and location of the Work under the Contract Documents, the general and local conditions of the Project, particularly those bearing upon availability of transportation, disposal, handling and storage of materials, availability of labor, water, electric power, and roads, the conformation and conditions at the ground based on City provided reports, the type of equipment and facilities needed preliminary to and during the prosecution of the Work and all other matters which can in any way affect the Work or the cost thereof under the Contract Documents.

8.4 The Contractor has also studied carefully all reports of investigations and tests of subsurface and latent physical conditions at the site or otherwise affecting cost, progress or performance of the Works, and finds and has further determined that no conditions exist that would in any manner affect the Proposed Price and that the project can be completed for the Proposed Price submitted.

8.5 Contractor has made or caused to be made examinations, investigations, tests and studies of such reports and related data in addition to those referred to in Paragraphs 8.2, 8.3 and 8.4 above as he deems necessary for the performance of the Work at the Contract Prices, within the Contract Time and in accordance with the other terms and conditions of the Contract Documents; and no additional examinations, investigations, tests, reports or similar data are, or will be, required by Contractor for such purposes.

8.6 Contractor has correlated the results of all such observations, examinations, investigations, tests, reports and data with the terms and conditions of the Contract Documents.

8.7 Contractor has given City written notice of all conflicts, errors or discrepancies that he has discovered in the Contract Documents and the written resolution by City is acceptable to the Contractor.

8.8 <u>Labor</u>

8.8.1 The Contractor shall provide competent, suitable qualified personnel to survey and lay out the Work and perform construction as required by the Contract Documents. The Contractor shall at all times maintain good discipline and order at the site.

8.8.2 The Contractor shall, at all times, have a competent superintendent, capable of reading and thoroughly understanding the drawings and specifications, as the Contractor's agent on the Work, who shall, as the Contractor's agent, supervise, direct and otherwise conduct the Work.

SAMPLE CONSTRUCTION AGREEMENT

8.8.3 The Contractor shall designate the superintendent on the job to the City, in writing, immediately after receipt of the Notice to Proceed. The Contractor understands and agrees that the superintendent's physical presence on the job site is indispensable to the successful completion of the Work. If the superintendent is frequently absent from the job site, the Project Manager may deliver written notice to the Contractor to stop work or terminate the Contract in accordance with Article 17.

8.8.4 The Contractor shall assign personnel to the job site that have successfully completed training programs related to trench safety, confined space and maintenance of traffic. A certified "competent person" shall be assigned to the job site. Personnel certified by the International Municipal Signal Associations with Florida Department of Transportation qualifications are required relative to maintenance of traffic. Failure to pursue the Work with the properly certified supervisory staff may result in notice to stop work or terminate the Contract in accordance with Article 17.

8.9 Materials:

8.9.1 The Contractor shall furnish all materials, equipment, labor, transportation, construction equipment and machinery, tools, appliances, fuel, power, light, heat, telephone, water and sanitary facilities and all other facilities and incidentals necessary for the execution, testing, initial operation and completion of Work.

8.9.2 All material and equipment shall be of good quality and new, except as otherwise provided in the Contract Documents. Suppliers shall be selected and paid by the Contractor; the City reserves the right to approve all suppliers and materials.

8.10 Work Hours: Except in connection with the safety or protection of persons, or the Work, or property at the site or adjacent thereto, and except as otherwise indicated in the Supplementary Conditions, all work at the site shall be performed during regular working hours between 7 a.m. and 6:00 p.m., Monday through Friday. The Contractor will not permit overtime work or the performance of work on Saturday, Sunday or any legal holiday (designated by the City of Fort Lauderdale) without the Project Manager's written consent at least seventy two (72) hours in advance of starting such work. If the Project Manager permits overtime work, the Contractor shall pay for the additional charges to the City with respect to such overtime work. Such additional charges shall be a subsidiary obligation of the Contractor and no extra payment shall be made to the Contractor for overtime work. The cost to the Contractor to reimburse the City for overtime inspection is established at direct-labor and overtime costs for each person or inspector required. Incidental overtime costs for engineering, testing and other related services will also be charged to the Contractor at the actual rate accrued.

8.11 Patent Fee and Royalties: The Contractor shall pay all license fees and royalties and assume all costs incident to the use in the performance of the Work or the incorporation in the Work, or any invention, design, process, product or device which is the subject of patent rights or copyrights held by others. The Contractor hereby expressly binds himself or itself to indemnify and save harmless the City from all such

SAMPLE CONSTRUCTION AGREEMENT

claims and fees and from any and all suits and action of every name and description that may be brought against City on account of any such claims, fees, royalties, or costs for any such invention or patent, and from any and all suits or actions that may be brought against said City for the infringement of any and all patents or patent rights claimed by any person, firm corporation or other entity.

8.12 Permits: The Contractor shall obtain and pay for all permits and licenses. There shall be no allowance for Contractor markup, overhead or profit for permits and licenses. The Contractor shall pay all government charges which are applicable at the time of opening of proposals. It shall be the responsibility of the Contractor to secure and pay for all necessary licenses and permits of a temporary nature necessary for the prosecution of Work.

8.13 Law and Regulations: The Contractor shall give all notices and comply with all laws, ordinances, rules and regulations applicable to the Work. If the Contractor observes that the specifications or plans are at variance therewith, the Contractor shall give the Project Manager prompt written notice thereof, and any necessary changes shall be adjusted by any appropriate modifications. If the Contractor performs any work knowing or having reason to know that it is contrary to such laws, ordinance, rules and regulations, and without such notice to the Project Manager, the Contractor shall bear all costs arising therefrom; however, it shall not be the Contractor's primary responsibility to make certain that the specifications and plans are in accordance with such laws, ordinances, rules and regulations.

8.14 Taxes: The Contractor shall pay all sales, consumer, use and other similar taxes required to be paid by him in accordance with the laws of the City of Fort Lauderdale, County of Broward, State of Florida.

8.15 Contractor Use of Premises: The Contractor shall confine construction equipment, the storage of materials and equipment and the operations of workmen to areas permitted by law, ordinances, permits and/or the requirements of the Contract Documents, and shall not unreasonably encumber the premises with construction equipment or other materials or equipment.

The Contractor shall not enter upon private property for any purpose without first securing the permission of the property owner in writing and furnishing the Project Manager with a copy of said permission. This requirement will be strictly enforced, particularly with regard to such vacant properties as may be utilized for storage or staging by the Contractor.

The Contractor shall conduct his work in such a manner as to avoid damage to adjacent private or public property. Any damage to existing structures of work of any kind, including permanent reference markers or property corner markers, or the interruption of a utility service, shall be repaired or restored promptly at no expense to the City.

The Contractor will preserve and protect all existing vegetation such as trees, shrubs and grass on or adjacent to the site which do not reasonably interfere with the construction, as determined by the Project Manager. The Contractor will be

SAMPLE CONSTRUCTION AGREEMENT

responsible for repairing or replacing any trees, shrubs, lawns and landscaping that may be damaged due to carless operation of equipment, stockpiling of materials, tracking of grass by equipment or other construction activity. The Contractor will be liable for, or will be required to replace or restore at no expense to the City all vegetation not protected or preserved as required herein that may be destroyed or damaged.

During the progress of the work, the Contractor shall keep the premises free from accumulations of waste materials, rubbish and debris resulting from the Work. At the completion of the Work, the Contractor shall remove all waste materials, rubbish and debris from and about the premises as well as all tools, appliances, construction equipment and machinery, and surplus materials and shall leave the site clean and ready for occupancy by the City. The Contractor shall restore to their original condition those portions of the site not designated for alteration by the Contract Documents at no cost to the City.

8.16 Project Coordination: The Contractor shall provide for the complete coordination of the construction effort. This shall include, but not necessarily be limited to, coordination of the following:

8.16.1 Flow of material and equipment from suppliers.
8.16.2 The interrelated work with affected utility companies.
8.16.3 The interrelated work with the City where tie-ins to existing facilities are required.
8.16.4 The effort of independent testing agencies.
8.16.5 Notice to affected property owners as may be directed by the Project Manager.

8.17 Project Record Documents and As-Builts (Record Drawings): The Contractor shall keep one record copy of all specifications, plans addenda, modifications, shop drawings and samples at the site, in good order and annotated to show all changes made during the construction process. These shall be available to the Project Manager for examination and shall be delivered to the Project Manager upon completion of the Work. Upon completion of the project and prior to final payment, an as-built (record drawings) of the Project shall be submitted to the Project Manager. The as-built drawings shall be signed and sealed by a Florida Registered Professional Surveyor and Mapper, Engineer, Architect or Landscape Architect depending on the type drawing.

8.18 Safety and Protection:

8.18.1 The Contractor shall be responsible for initiating, maintaining and supervising all safety precautions and programs in connection with the Work. The Contractor shall take all necessary precautions for the safety of, and shall provide the necessary protection to prevent damage, injury or loss to:

8.18.1.1 All employees working on the project and other persons who may be affected thereby.
8.18.1.2 All the Work and all materials or equipment to be incorporated therein, whether in storage on or off the site.

SAMPLE CONSTRUCTION AGREEMENT

8.18.1.3 Other property at the site or adjacent thereto, including trees, shrubs, lawns, walks, pavements, roadways, structures and utilities not designated for removal, relocation or replacement in the course of construction.

8.18.2 The Contractor shall comply with all applicable laws, ordinances, rules, regulations and orders of any public body having jurisdiction for the safety of persons or property or to protect them from damage, injury or loss; and shall erect and maintain all necessary safeguards for such safety and protection. The Contractor shall notify owners of adjacent property and utilities when prosecution of the Work may affect them at least seventy two (72) hours in advance (unless otherwise required). All damage, injury or loss to any property caused, directly or indirectly, in whole or in part by the Contractor, any subcontractor or anyone directly or indirectly employed by any of them or anyone for whose acts any of them may be liable, shall be remedied by the Contractor. The Contractor's duties and responsibilities for safety and protection of the Work shall continue until such time as all the Work is completed and accepted by the City.

8.19 Emergencies: In emergencies affecting the safety or protection of persons or the Work or property at the site or adjacent thereto, the Contractor, without special instruction or authorization from the City is obligated to act to prevent threatened damage, injury or loss. The Contractor shall give the Project Manager prompt written notice of any significant changes in the Work or deviations from the Contract Documents caused thereby.

8.20 Risk of Loss: The risk of loss, injury or destruction shall be on the Contractor until acceptance of the Work by the City. Title to the Work shall pass to the City upon acceptance of the Work by the City.

8.21 Environmental: The Contractor has fully inspected the Premises and agrees, except as to the presence of any asbestos, to accept the Premises in an "as is" physical condition, without representation or warranty by the City of any kind, including, without limitation, any and all existing environmental claims or obligations that may arise from the presence of any "contamination" on, in or about the Premises. Further, Contractor and all entitles claiming by, through or under the Contractor, releases and discharges the City, from any claim, demand, or cause of action arising out of or relating to the Contractor's use, handling, storage, release, discharge, treatment, removal, transport, decontamination, cleanup, disposal and/or presence of any hazardous substances including asbestos on, under, from or about the Premises. The Contractor shall have no liability for any pre-existing claims or "contamination" on the Premises.

The Contractor shall not use, handle, store, discharge, treat, remove, transport, or dispose of Hazardous Substances including asbestos at, in, upon, under, to or from the Premises until receipt of instructions from the City. As such time, a City approved Change Order, which shall not include any profit, shall authorize the Contractor to perform such services.

SAMPLE CONSTRUCTION AGREEMENT

The Contractor shall immediately deliver to the Project Manager complete copies of all notices, demands, or other communications received by the Contractor from any governmental or quasi-governmental authority or any insurance company or board of fire underwriters or like or similar entities regarding in any way alleged violations or potential violations of any Environmental Law or otherwise asserting the existence or potential existence of any condition or activity on the Premises which is or could be dangerous to life, limb, property, or the environment.

For other and additional consideration, the Contractor hereby agrees, at its sole cost and expense, to indemnify and protect, defend, and hold harmless the City and its respective employees, agents, officials, officers, representatives, contractors and subcontractors, successors, and assigns (hereafter the "City") from and against any and all claims, demands, losses, damages, costs, expenses, including but not limited to mitigation, restoration, and natural restoration expenses, liabilities, assessments, fines, penalties charges, administrative and judicial proceedings and orders, judgments, causes of action, in law or in equity, remedial action requirements and/or enforcement actions of any kind (including, without limitation, attorneys' fees and costs) directly or indirectly arising out of or attributable to, in whole or in part, the Contractor's use, handling, storage, release, threatened release, discharge, treatment, removal, transport, decontamination, cleanup, disposal and/or presence of a Hazardous Substance (excluding asbestos) on, under, from, to or about the Premises or any other activity carried on or undertaken on or off the Premises by the Contractor or its employees, agents or subcontractors, in connection with the use, handling, storage, release, threatened release, discharge, treatment, mitigation, natural resource restoration, removal, transport, decontamination, cleanup, disposal and/or presence or any Hazardous Substance including asbestos located, transported, or present on, undue, from, to, or about the Premises. This indemnity is intended to be operable under 42 U.S.C. sections 9607, as amended, and any successor section.

The scope of the indemnity obligations includes, but is not limited to: (a) all consequential damages; (b) the cost of any required or necessary repair, cleanup, or detoxification of the applicable real estate and the preparation and implementation of any closure, remedial or other required plan, including without limitation; (i) the costs of removal or remedial action incurred by the United Station government or the State of Florida or response costs incurred by any other person, or damages from injury to destruction of, or loss of, natural resources, including the cost of assessing such injury, destruction, or loss, incurred pursuant to the Comprehensive Environmental Response, Compensation and Liability Act, as amended; (ii) the clean-up costs, fines, damages, or penalties incurred pursuant to any applicable provisions of Florida law; and (iii) the cost and expenses of abatement, correction or cleanup, fines, damages, responses costs, or penalties which arise from the provisions of any other statue, law, regulation, code ordinance, or legal requirement state or federal; and (c) liability for personal injury or property damage arising under any statutory or common law tort theory, including damages assessed for the maintenance of a public private nuisance, response costs, or for the carrying on of an abnormally dangerous activity.

8.22 No Extended Damages: For other and additional good and valuable consideration the receipt and sufficiency of which is hereby acknowledged, the Contractor covenants and agrees that in the event of any delay of construction or for any other reason or

SAMPLE CONSTRUCTION AGREEMENT

allegation or claim, and notwithstanding the reason of the delay, reason, claim or allegation or who caused them or the construction delay or whether they were caused by the City, that there will be no entitlement to Contractor to or for any direct or indirect financial damages or losses for extended corporate overhead impact, extended project overhead impacts, project support services, mobilization or demobilization or by whatever other label or legal concept or theory and types of names or labels or basis such claims may have, or any business damages or losses of whatever type or nature, and Contractor hereby waives any right to make any such claim or claims. This provision will have application and effect when construction delays are anticipated and agreed upon by both the City and the Contractor.

8.23 No Liens: If any Subcontractor, supplier, laborer, or materialmen of Contractor or any other person directly or indirectly acting for or through Contractor files or attempts to file a mechanic's or construction lien against the real property on which the work is performed or any part or against any personal property or improvements or claim against any monies due or to become due from the City to Contractor or from Contractor to a Subcontractor, for or on account of any work, labor, services, material, equipment, or other items furnished in connection with the Work or any Change Order, Contractor agrees to satisfy, remove, or discharge such lien or claim at its own expense by bond, payment, or otherwise within twenty (20) days of the filing or from receipt of written notice from the City.

Additionally, until such time as such lien or claim is satisfied, removed or discharged by Contractor, all monies due to Contractor, or that become due to Contractor before the lien or claim is satisfied, removed or otherwise discharged, shall be held by City as security for the satisfaction, removal and discharge of such lien and any expense that may be incurred while obtaining such. If Contractor shall fail to do so, City shall have the right, in addition to all other rights and remedies provided by this Agreement or by law, to satisfy, remove, or discharge such lien or claim by whatever means City chooses at the entire and sole cost and expense of Contractor which costs and expenses shall, without limitation, include attorney's fees, litigation costs, fees and expenses and all court costs and assessments.

8.24 Weather Emergencies: Upon issuance of a Hurricane Watch by the National Weather Service, the Contractor shall submit to the City a plan to secure the work area in the event a Hurricane Warning is issued. The plan shall detail how the Contractor will secure the Premises, equipment and materials in a manner as to prevent damage to the Work and prevent materials and equipment from becoming a hazard to persons and property on and around the Premises. The plan shall include a time schedule required to accomplish the hurricane preparations and a list of emergency contacts that will be available and in the City before, during and immediately after the storm.

Upon issuance of a Hurricane Warning by the National Weather Service, if the Contractor has not already done so, the Contractor shall implement its hurricane preparedness plan. Cost of development and implementation of the hurricane preparedness plan shall be considered as incidental to construction. Cost of any clean up and rework required after the storm will be considered normal construction risk within Florida and shall not entitle the Contractor to any additional compensation. Contractor shall be entitled to request an extension in time for completion of the Work,

SAMPLE CONSTRUCTION AGREEMENT

in accordance with the provisions of Article 15 of this Agreement, equal to the time he is shut down for implementation of the preparedness plan, the duration of the storm and a reasonable period to restore the Premises.

8.25 Force Majeure: No Party shall hold the other responsible for damages or for delays in performance caused by force majeure, acts of God, or other acts or circumstances beyond the control of the other party or that could not have been reasonably foreseen and prevented. For this purposes, such acts or circumstances shall include, but not be limited to weather conditions affecting performance, floods, epidemics, war, riots, strikes, lockouts, or other industrial disturbances, or protect demonstrations. Should such acts or circumstances occur, the parties shall use their best efforts to overcome the difficulties arising therefrom and to resume the Work as soon as reasonably possible with the normal pursuit of the Work.

Inclement weather, continuous rain for less than three (3) days or the acts or omissions of subcontractors, third-party contractors, materialmen, suppliers, or their subcontractors, shall not be considered acts of force majeure.

No Party shall be liable for its failure to carry out its obligations under the Agreement during a period when such Party is rendered unable by force majeure to carry out its obligation, but the obligation of the Party or Parties relying on such force majeure shall be suspended only during the continuance of the inability and for no longer period than the unexpected or uncontrollable event.

The Contractor further agrees and stipulates, that its right to excuse its failure to perform by reason of force majeure shall be conditioned upon giving written notice of its assertion that a Force Majeure delay has commenced within 96 hours after such an occurrence. The CONTRACTOR shall use its reasonable efforts to minimize such delays. The CONTRACTOR shall promptly provide an estimate of the anticipated additional time required to complete the Project.

8.26 PARTICIPATION BY DISADVANTAGED BUSINESS ENTERPRISES IN DEPARTMENT OF TRANSPORTATION FINANCIAL ASSISTED CONTRACTS: The recipient shall not discriminate on the basis of race, color, national origin, or sex in the award and performance of any DOT-assisted contract or in the administration of its DBE program or the requirements of 49 CFR part 26. The recipient shall take all necessary and reasonable steps under 49 CFR part 26 to ensure nondiscrimination in the award and administration of DOT-assisted contracts. The recipient's DBE program, as required by 49 CFR part 26 and as approved by DOT, is incorporated by reference in this agreement. Implementation of this program is a legal obligation and failure to carry out its terms shall be treated as a violation of this agreement. Upon notification to the recipient of its failure to carry out its approved program, the Department may impose sanctions as provided for under part 26 and may, in appropriate cases, refer the matter for enforcement under 18 U.S.C. 1001 and/or the Program Fraud Civil Remedies Act of 1986 (31 U.S.C. 3801 *et seq.*).

Additionally, the contractor assures that they, the sub recipient or the subcontractor shall not discriminate on the basis of race, color, national origin, or sex in the performance of this contract. The contractor shall carry out applicable requirements of

SAMPLE CONSTRUCTION AGREEMENT

49 CFR part 26 in the award and administration of DOT-assisted contracts. Failure by the contractor to carry out these requirements is a material breach of this contract, which may result in the termination of this contract or such other remedy as the recipient deems appropriate. (This additional language must be included in each subcontract the prime contractor signs with a subcontractor.)

ARTICLE 9 – CITY'S RESPONSIBILITIES

9.1 The City shall furnish the data required of the City under the Contract Documents promptly and shall make payments to the Contractor promptly after they are due as provided in Article 7.

9.2 The City's duties in respect of providing lands and easements and providing engineering surreys to establish reference points are set forth in the Contract Documents.

9.3 Technical Clarifications and Interpretations:

9.3.1 The City shall issue, with reasonable promptness, such written clarifications or interpretations of the Contract Documents as it may determine necessary, which shall be consistent with or reasonably inferable from the overall intent of the Contract Documents. Should the Contractor fail to request interpretation of questionable items in the Contract Documents, the City shall not entertain any excuse for failure to execute the Work in a satisfactory manner.

9.3.2 The City shall interpret and decide matters concerning performance under the requirements of the Contract Documents, and shall make decisions on all claims, disputes or other matters in question. Written notice of each claim, dispute or other matter will be delivered by claimant to the other Party but in no event later than five (5) days after the occurrence of event, and written supporting date will be submitted to the other Party within five (5) days after such occurrence. All written decisions of the City on any claim or dispute will be final and binding.

9.4 The Contractor shall perform all Work to the reasonable satisfaction of the City in accordance with the Contract Documents. In cases of disagreement or ambiguity, the City shall decide all questions, difficulties, and disputes of whatever nature, which may arise under or by reason of this Agreement or the quality, amount and value of the Work, and the City's decisions on all claims, questions and determination are final.

ARTICLE 10 – BONDS AND INSURANCE

10.1 Public Construction and Other Bonds: The Contractor shall furnish Public Construction or Performance and Payment Bonds ("Bond"), each in an amount at least equal to the Contract Price as security for the faithful performance and payment of all the Contractor's obligations under the Contract Documents. These Bonds shall remain in effect until at least one (1) year after the date of final payment, except as otherwise provided by law. All Bonds shall be furnished and provided by the surety and shall be in substantially the same form as prescribed by the Contract Documents and be executed by such sureties as (i) are licensed to conduct business in the State

SAMPLE CONSTRUCTION AGREEMENT

of Florida, and (ii) are named in the current list of Companies Holding Certificates of Authority as Acceptable Sureties on Federal Bonds and as Acceptable Reinsuring Companies as published in Circular 570 (amended) by the Audit Staff Bureau of Accounts, U.S. Treasury Department and (iii) otherwise meet the requirements set forth herein that apply to sureties. All Bonds signed by an agent must be accompanied by a certified copy of the authority to act.

10.1.1 Performance Bond: A Corporate Surety Bond legally issued, meeting the approval of, and running to the City in an amount not less than the Contract Price of such improvements, conditioned that the Contractor shall maintain and make all repairs to the improvements constructed by the Contractor at their own expense and free of charge to the City, for the period of one (1) year after the date of acceptance of the Work within such period by reason of any imperfection of the material used or by reason of any defective workmanship, or any improper, imperfect or defective preparation of the base upon which any such improvement shall be laid.

10.2 Disqualification of Surety: If the Surety on any Bond furnished by the Contractor is declared bankrupt or becomes insolvent or its right to do business is terminated in the State of Florida or it ceases to meet the requirements of clauses (i) and (ii) of Paragraph 10.1, the Contractor shall within five (5) days thereafter substitute another Bond and Surety, both of which shall be acceptable to the City.

10.3 Insurance

10.3.1 Contractor shall provide and shall require all of its sub-contractors to provide, pay for, and maintain in force at all times during the term of the Agreement, such insurance, including Property Insurance (Builder's Risk), Commercial General Liability Insurance, Business Automobile Liability Insurance, Workers' Compensation Insurance, Employer's Liability Insurance, and Umbrella / Excess Liability, as stated below. Such policy or policies shall be issued by companies authorized to do business in the State of Florida and having agents upon whom service of process may be made in the State of Florida.

A. The City is required to be named as additional insured on the Commercial General Liability insurance policy. BINDERS ARE UNACCEPTABLE. The insurance coverage required shall include those classifications, as listed in standard liability insurance manuals, which most nearly reflect the operations of the Contractor. Any exclusions or provisions in the insurance maintained by the Contractor that precludes coverage for the work contemplated in this Agreement shall be deemed unacceptable, and shall be considered a breach of contract.

B. The Contractor shall provide the City an original Certificate of Insurance for policies required by Article 10. All certificates shall state that the City shall be given ten (10) days' notice prior to expiration or cancellation of the policy. The insurance provided shall be endorsed or amended to comply with this notice requirement. In the event that the insurer is unable to accommodate, it shall be the responsibility of the Contractor to

SAMPLE CONSTRUCTION AGREEMENT

provide the proper notice. Such notification will be in writing by registered mail, return receipt requested and addressed to the Finance Department. Such policies shall: (1) name the insurance company or companies affording coverage acceptable to the City, (2) state the effective and expiration dates of the policies, (3) include special endorsements where necessary. Such policies provided under Article 10 shall not be affected by any other policy of insurance, which the City may carry in its own name.

C. Contractor shall as a condition precedent of this Agreement, furnish to the City of Fort Lauderdale, c/o Project Manager, 100 N. Andrews Avenue, Fort Lauderdale, FL 33301, Certificate(s) of Insurance upon execution of this Agreement, which indicate that insurance coverage has been obtained which meets the requirements as outlined below:

10.3.2 Property Insurance (Builder's Risk): The Contractor shall purchase and maintain property insurance upon the Work at or off the site of 100% of the contract completed value. These policies shall insure the interest of the owner, contractor and subcontractors in the Work, and shall insure against "all risks" of physical loss and damage including theft, vandalism and malicious mischief, collapse and water damage. All such insurance required by this paragraph shall remain in effect until the Work is completed and accepted by the City.

10.3.3 Commercial General Liability

A. Limits of Liability:
Bodily Injury and Property Damage - Combined Single Limit

Each Occurrence	$1,000,000
Project Aggregate	$1,000,000
General Aggregate	$2,000,000
Personal Injury	$1,000,000
Products/Completed Operations	$1,000,000

B. Endorsements Required:
City of Fort Lauderdale included as an Additional Insured
Broad Form Contractual Liability
Waiver of Subrogation
Premises/Operations
Products/Completed Operations
Independent Contractors
Owners and Contractors Protective Liability
Contractors Pollution Liability

10.3.4 Business Automobile Liability

A. Limits of Liability:
Bodily Injury and Property Damage - Combined Single Limit
All Autos used in completing the contract
Including Hired, Borrowed or Non-Owned Autos

SAMPLE CONSTRUCTION AGREEMENT

Any One Accident $1,000,000

B. Endorsements Required:
Waiver of Subrogation

10.3.5 Workers' Compensation and Employer's Liability Insurance

Limits: Workers' Compensation – Per Florida Statute 440
Employers' Liability - $500,000

Any firm performing work on behalf of the City of Fort Lauderdale must provide Workers' Compensation insurance. Exceptions and exemptions can only be made if they are in accordance with Florida Law.

Contractor must be in compliance with all applicable State and Federal workers' compensation laws, including the U.S. Longshore Harbor Workers' Act or Jones Act.

10.3.6 Umbrella/Excess Liability: The Contractor shall provide umbrella / excess coverage with limits of no less than $2,000,000 excess of Commercial General Liability, Automobile Liability and Employer's Liability.

10.3.7 All insurance policies required above shall be issued by companies authorized to do business under the laws of the State of Florida, with the following qualifications:

The Contractor's insurance must be provided by an A.M. Best's "A-" rated or better insurance company authorized to issue insurance policies in the State of Florida, subject to approval by the City's Risk Manager. Any exclusions or provisions in the insurance maintained by the Contractor that precludes coverage for work contemplated in this project shall be deemed unacceptable, and shall be considered breach of contract.
NOTE: CITY PROJECT NUMBER MUST APPEAR ON EACH CERTIFICATE.

Compliance with the foregoing requirements shall not relieve the Contractor of their liability and obligation under this section or under any other section of this Agreement.

The Contractor shall be responsible for assuring that the insurance certificates required in conjunction with this Section remain in force for the duration of the Project. If insurance certificates are scheduled to expire during the contractual period, the Contractor shall be responsible for submitting new or renewed insurance certificates to the City at a minimum of thirty (30) calendar days in advance of such expiration. In the event that expired certificates are not replaced with new or renewed certificates that cover the contractual period, the City shall:

A. Suspend the Agreement until such time as the new or renewed certificates are received by the City.

SAMPLE CONSTRUCTION AGREEMENT

B. The City may, at its sole discretion, terminate the Agreement for cause and seek damages from the Contractor in conjunction with the violation of the terms and conditions of the Agreement.

ARTICLE 11- WARRANTY AND GUARANTEE, TESTS AND INSPECTIONS, CORRECTION, REMOVAL OR ACCEPTANCE OF DEFECTIVE WORK

11.1 Warranty: The Contractor warrants and guarantees to the City that all Work will be in accordance with the Contract Documents and will not be defective. Prompt notice of all defects shall be given to the Contractor. All defective work, whether or not in place, may be rejected, corrected or accepted as provided in this Article.

11.1.1 Warranty of Title: The Contractor warrants to the City that it possesses good, clear and marketable title to all equipment and materials provided and that there are no pending liens, claims or encumbrances against the equipment and materials.

11.1.2 Warranty of Specifications: The Contractor warrants that all equipment, materials and workmanship furnished, whether furnished by the Contractor, its subcontractors or suppliers, will comply with the specifications, drawings and other descriptions supplied or adopted and that all services will be performed in a workmanlike manner.

11.1.3 Warranty of Merchantability: The Contractor warrants that any and all equipment to be supplied pursuant to this Agreement is merchantable, free form defects, whether patent or latent in material or workmanship, and fit for the ordinary purposes for which it is intended.

11.2 Tests and Inspections: The Contactor shall give the Project Manager timely (minimum of thirty six (36) hours) notice of readiness of the Work for all required inspections, tests, or approvals.

11.2.1 If any law, ordinance, rule, regulation, code or order of any public body having jurisdiction requires any Work (or part thereof) to specifically be inspected, tested or approved, the Contractor shall assume full responsibility, pay all costs in connection therewith and furnish the Project Manager the required certificates of inspection, testing or approval. The Contractor shall also be responsible for and shall pay all costs in connection with any inspection or testing required in connection with the City's acceptance of a manufacturer, fabricator, supplier or distributor of materials or equipment submitted for approval prior to the Contractor's purchase thereof for incorporation of the Work.

11.2.2 All inspections, tests or approvals other than those required by law, ordinance, rule, regulation, code or order of any public body having jurisdiction shall be performed by the City or by a professional testing firm designated by the City. The City will pay for sampling and testing if the test results are passing. The Contractor will reimburse the City for sampling, testing, and retesting costs associated with failing tests.

SAMPLE CONSTRUCTION AGREEMENT

11.2.3 Neither observations by the Project Manager nor inspections, tests or approvals by others shall relieve the Contractor from his obligations to perform the Work in accordance with Contract Documents.

11.3 Uncovering Work: If any work that is to be inspected, tested or approved is covered without approval or consent of the Project Manager, it must, if requested by the Project Manager, be uncovered for observation and/or testing. Such uncovering and replacement shall be at the Contractor's sole expense unless the Contractor has given the Project Manager timely notice of the Contractor's intention to cover such Work and the Project Manager has not acted with reasonable promptness in response to such notice.

11.3.1 If the Project Manager considers it necessary or advisable that Work covered in accordance with Paragraph 11.2.1, 11.2.2 and 11.2.3 be observed by the City or inspected or tested by others, the Contractor at the City's request, shall uncover, expose of otherwise make available for observation, inspection or testing as the Project Manager may require, that portion of the Work in question, furnishing all necessary labor, material and equipment. If it is found that such Work is defective, the Contractor shall bear all the expenses of such uncovering, exposure, observation, inspection and testing and of satisfactory reconstruction, including compensation for additional professional services, and an appropriate deductive Change Order shall be issued. If, however, such work is not found to be defective, the Contractor shall be allowed an increase in the Contract Price or an extension of the Contract Time, or both, directly attributable to such uncovering, exposure, observation, inspection testing and reconstruction if he makes a claim therefor as provided in Articles 14 and 15.

11.4 City May Stop the Work: If the Work is defective, or the Contractor fails to supply sufficient skilled supervisory personnel or workmen or suitable materials or equipment or the work area is deemed unsafe, the City may order the Contractor to stop the Work, or any portion thereof, until the cause for such order has been eliminated; however, this right of the City to stop the Work shall not give rise to any duty on the part of the City to exercise this right for the benefit of the Contractor or any other party. The City will not award any increase in Contract Price or Contract Time if the Work is stopped due to the circumstances described herein.

11.5 Correction or Removal of Defective Work Before Final Payment: If required by the Project Manager, the Contractor shall promptly, without cost to the City and as Specified by the Project Manager, either correct any defective Work, whether or not fabricated, installed or completed, or if the Work has been rejected by the City remove it from the site and replace it with non-defective Work.

11.6 One Year Correction Period After Final Payment: If within one (1) year after the date of final acceptance, or such longer period of time as may be prescribed by law or by the terms of any applicable special guarantee required by the Contract Documents, any work is found to be defective, the Contractor shall promptly, without cost to the City and in accordance with the City's written instructions, either correct such defective Work, or, if it has been rejected by the City, remove it from the site and replace it with non-defective Work.

SAMPLE CONSTRUCTION AGREEMENT

If The Contractor does not promptly comply with the terms of such instructions or in an emergency where delay would cause serious risk of loss or damage, the City may have the defective Work corrected or the rejected Work removed and replaced, and all direct and indirect costs for such removal and replacement, including compensation for additional professional services, shall be paid by the Contractor.

11.7 Acceptance of Defective Work, Deductions: If, instead of requiring correction or removal and replacement of defective Work, the City, at the city's sole option, prefers to accept it, the City may do so. In such a case, if acceptance occurs prior to the Project Manager's recommendation of final payments, a Change Order shall be issued incorporating the necessary revisions in the Contracts Documents, including appropriate reduction in the Contract Price; or if the acceptance occurs after such recommendation, an appropriate amount shall be paid by the Contractor to the City.

11.8 City May Correct Defective Work: If the Contractor fails within a reasonable time after written notice of the Project Manager to proceed to correct defective Work or to remove and replace rejected Work as required by the Project Manager in accordance with Paragraph 11.5, or if the Contractor fails to perform the Work in accordance with the Contract Documents, the City may, after seven (7) days written notice to the Contractor, correct and remedy any such deficiency. In exercising its rights under this paragraph, the City shall proceed expeditiously. To the extent necessary to complete corrective and remedial action, the City may exclude the Contractor from all or part of the site, take possession of all or part of the Work, suspend the Contractor's services related thereto and take possession of the Contractor's tools, construction equipment and materials stored at the site or elsewhere. The Contractor shall allow the City's representative agents and employees such access to the site as may be necessary to enable the City to exercise its rights under this paragraph. All direct and indirect costs of the City in exercising such rights shall be charged against the Contractor in an amount verified by the Project Manager, and a Change Order shall be issued incorporating the necessary revisions in the Contract Documents and a reduction in the Contract Price. Such direct and indirect costs shall include, in particular but without limitation, compensation for additional professional services required and costs of repair and replacement of work of others destroyed or damaged by correction, removal or replacement of the Contractor's defective Work. The Contractor shall not be allowed an extension of the Contract Time because of any delay in performance of the Work attributable to the exercise by the City of the City's right hereunder.

SAMPLE CONSTRUCTION AGREEMENT

ARTICLE 12 – INDEMNIFICATION

12.1 Disclaimer of Liability: The City shall not at any time, be liable for injury or damage occurring to any person or property from any cause, whatsoever, arising out of Contractor's construction and fulfillment of this agreement.

12.2 Indemnification: For other, additional good valuable consideration, the receipt and sufficiency of which is hereby acknowledged:

12.2.1 Contractor shall, at its sole cost and expense, indemnify and hold harmless the City, its representatives, employees and elected and appointed officials from or on account of all claims, damages, losses, liabilities and expenses, direct,

indirect or consequential including but not limited to fees and charges of engineers, architects, attorneys, consultants and other professionals and court costs arising out of or in consequence of the performance of this Agreement at all trial and appellate levels. Indemnification shall specifically include but not be limited to claims, damages, losses, liabilities and expenses arising out of or from (a) the negligent or defective design of the project and Work of this Agreement; (b) any act, omission or default of the Contractor, its Subcontractors, agents, servants or employees; (c) any and all bodily injuries, sickness, disease or death; (d) injury to or destruction of tangible property, including any resulting loss of use; (e) other such damages, liabilities, or losses received or sustained by any person or persons during or on account of any operations connected with the construction of this Project including the warranty period; (f) the use of any improper materials; (g) any construction defect including both patent and latent defects; (h) failure to timely complete the work; (i) the violation of any federal, state, county or city laws, ordinances or regulations by Contractor, its subcontractors, agents, servants, independent contractors or employees; (j) the breach or alleged breach by Contractor of any term of the Agreement, including the breach or alleged breach of any warranty or guarantee.

12.2.2 Contractor agrees to indemnify, defend, save and hold harmless the City, its officers, agents and employees, from all damages, liabilities, losses, claims, fines and fees, and from any and all suits and actions of every name and description that may be brought against City, its officers, agents and employees, on account of any claims, fees, royalties, or costs for any invention or patent and/or for the infringement of any and all copyrights or patent rights claimed by any person, firm, or corporation.

12.2.3 Contractor shall pay all claims, losses, liens, settlements or judgments of any nature in connection with the foregoing indemnifications including, but not limited to, reasonable attorney's fees and costs for trails and appeals.

12.2.4 If any Subcontractor, supplier, laborer, or materialmen of Contractor or any other person directly or indirectly acting for or through Contractor files or attempts to file a mechanic's or construction lien against the real property on which the work is performed or any part or against any personal property or improvements thereon or make a claim against any monies due or to become due from the City to Contractor or from Contractor to a Subcontractor, for or on account of any work, labor, services, material, equipment, or other items furnished in connection with the Work or any change order, Contractor agrees to satisfy, remove, or discharge such lien or claim at its own expense by bond, payment, or otherwise within five (5) days of the filing or from receipt of written notice from the City.

Additionally, unit such time as such lien or claim is satisfied, removed or discharged by Contractor, all monies due to Contractor, or that become due to Contractor before the lien or claim is satisfied, removed or otherwise discharged, shall be held by City as security for the satisfaction, removal and discharge of such lien and any expense that may be incurred while obtaining the discharge. If Contractor shall fail to do so, City shall have the right, in

SAMPLE CONSTRUCTION AGREEMENT

addition to all other rights and remedies provided by this Agreement or by law, to satisfy, remove, or discharge such lien or claim by whatever means City chooses at the entire and sole cost and expense of Contractor which costs and expenses shall, without limitation, include attorney's fees, litigation costs, fees and expenses and all court costs and assessments, and which shall be deducted from any amount owing to Contractor. In the event the amount due Contractor is less than the amount required to satisfy Contractor's obligation under this, or any other article, paragraph or section of this Agreement, the Contractor shall be liable for the deficiency due the City.

12.2.5 The Contractor and the City agree that Section 725.06(2), Florida Statutes controls the extent and limits of the indemnification and hold harmless provisions of this Agreement, if any, and that the parties waive any defects in the wording of this Article that runs afoul of said statutory section.

ARTICLE 13 – CHANGES IN THE WORK

13.1 Without invalidating this Agreement, the City may, at any time or from time to time order additions, deletions or revisions in the Work through the issuance of Change Orders. Upon receipt of a Change Order, the Contractor shall proceed with the Work involved. All Work shall be executed under the applicable conditions of the Contract Documents. If any Change Order causes an increase or decrease in the Contract Price or an extension or shortening of the Contract Time, an equitable adjustment will be made as provided in Article 14 or Article 15 on the basis of a claim made by either Party.

13.2 The Project Manager may authorize minor changes in the work not involving an adjustment in the Contract Price of the Contract Time, which are consistent with the overall intent of the Contract Documents. Such changes must be in writing and signed by the City and the Contractor.

13.3 If notice of any change affecting the general scope of the Work or change in the Contract Price is required by the provisions of any Bond to be given to the Surety, it will be the Contractor's responsibility to so notify the Surety, and the amount of each applicable Bond shall be adjusted accordingly. The Contractor shall furnish proof of such adjustment to the City.

ARTICLE 14 – CHANGE OF CONTRACT PRICE

Change of Contract Price, approved by CITY, shall be computed as follows:

14.1 Cost of the Work: The term "Cost of the Work" means the sum of all direct costs necessarily incurred and paid by Contractor in the proper performance of the Work. Except as otherwise may be agreed to in writing by the City, these costs shall be in amounts no higher than those prevailing in the City and shall include only the following items and shall not include any of the costs itemized in Paragraph 14.2:

14.1.1 Payroll costs for employees in the direct employ of the Contractor in the performance of the Work under schedules of job classifications agreed upon by the City and the Contractor. Payroll costs for employees not employed full time

SAMPLE CONSTRUCTION AGREEMENT

on the Work shall be apportioned on the basis of their time spent on the Work. Payroll costs shall include, but not be limited to, salaries and wages plus and cost of fringe benefits which shall include social security contributions, unemployment, excise and payroll taxes, worker's compensation, health and retirement benefits, bonuses, sick leave, vacation and applicable holiday pay.

14.1.2 Cost of all materials and equipment furnished and incorporated in the Work, including costs of transportation and storage, and required suppliers and field services. All cash discounts, rebates and refunds and all returns from sale of surplus materials and equipment shall accrue to the City, and the Contractor shall make provisions so that they may be obtained.

14.1.3 Supplemental costs including the following:

14.1.3.1 Cost, including transportation and maintenance of all materials, supplies, equipment, machinery, appliances, office and temporary facilities at the site and hand tools not owned by the workers, which are consumed in the performance of the Work.

14.1.3.2 Rentals of all construction equipment and machinery and the parts whether rented from the Contractor or others in accordance with rental agreements approved by the City, and the costs of transporting, loading, unloading, installation, dismantling and removal. The rental of any such equipment, machinery or parts shall cease when the use is no longer necessary for the Work.

14.1.3.3 Sales, consumer, use or similar taxes related to the Work and for which the Contractor is liable, imposed by laws and regulations.

14.1.3.4 Royalty payments and fees for permits and licenses.

14.1.3.5 The cost of utilities, fuel and sanitary facilities at the Work site.

14.1.3.6 Minor expenses such as telegrams, long distance telephone calls, telephone service at the site, expressage and similar petty cash items in connection with the Work.

14.1.3.7 Cost of premiums for additional bonds and insurance required because of changes in the Work.

14.2 The Contract Price may only be increased by a Change Order when Work is modified in accordance with Article 13 and approved by the CITY in writing. Any claim for an increase in the Contract Price resulting from a Change Order shall be based on written notice delivered to the Project Manager within ten (10) days of the occurrence of the Change Order giving rise to the claim. Notice of the amount of the claim with supporting data shall be included in the Change Order and delivered within twenty (20) days of such occurrence unless Project Manager allows an additional period of time to ascertain accurate cost data. Any change in the Contract Price resulting from any such claim shall be incorporated in the Change Order.

SAMPLE CONSTRUCTION AGREEMENT

14.3 Not Included in the Cost of the Work: The term "cost of the Work" shall not include any of the following:

14.3.1 Payroll costs and other compensation of the Contractor's officers executives, principals (of partnership and sole proprietorships), general managers, engineers, architects, estimators, attorneys, auditor, accountants, purchasing and contracting agents, expediters, timekeepers, clerks and other personnel employed by the Contractor whether at the site or in the Contractor's principal or branch office for general administration of the work and not specifically included in the agreed upon schedule of job classifications referred to in Paragraph 14.1.1, all of which are to be considered administrative costs covered by the Contractor's fee.

14.3.2 Expenses of the Contractor's principal and branch offices other than the Contractor's office at the site.

14.3.3 Any part of the Contractor's capital expenses, including interest on the Contractor's capital employed for the Work and charges against the Contractor for delinquent payments.

14.3.4 Cost of premiums for all bonds and for all insurance whether or not the Contractor is required by the Contract Documents to purchase and maintain the same.

14.3.5 Costs due to the negligence of the Contractor, any subcontractor, or anyone directly or indirectly employed by any of them or for whose acts any of them may be liable, including but not limited to, the correction of defective Work, disposal of materials or equipment wrongly supplied and making good any damage to property.

14.3.6 Other overhead or general expense costs of any kind and the costs of any item not specifically and expressly included in Paragraph 14.1

14.4 Basis of Compensation: The Contractor's compensation, allowed to the Contractor for overhead and profit, shall be determined as follows:

14.4.1 A mutually acceptable negotiated fee:

14.4.1.1 For costs incurred under Paragraphs 14.1.1 and 14.1.2, the Contractor's fee shall not exceed five percent (5%).

14.4.1.2 No fee shall be payable on the basis of costs itemized under Paragraphs 14.1.3.1, 14.1.3.2, 14.1.3.3, 14.1.3.4, 14.1.3.5, 14.1.3.6, 14.1.3.7, 14.3.1, 14.3.2, 14.3.3, 14.3.4, 14.3.5 and 14.3.6.

14.4.1.3 The amount of credit to be allowed by the Contractor to the City for any such change which results in a net decrease plus a deduction in the Contractor's fee by an amount equal to five percent (5%) for the net decrease.

SAMPLE CONSTRUCTION AGREEMENT

14..1.4 When both additions and credits are involved in any one change the combined overhead and profit shall be figured on the basis of net increase if any, however, not to exceed five percent (5%) of the agreed compensation. Profit will not be paid on any Work not performed.

14.5 Cost Breakdown Required: Whenever the cost of any Work is to be determined pursuant to this Article, the Contractor will submit in form acceptable to the City an itemized cost breakdown together with supporting documentation. Whenever a change in the Work is to be based upon mutual acceptance of a lump sum, whether the amount is an addition, credit, or no-charge-in-cost, the Contractor shall submit an estimate substantiated by a complete itemized breakdown:

14.5.1 The breakdown shall list quantities and unit prices for materials, labor, equipment and other items of cost.

14.5.2 Whenever a change involves the Contractor and one (1) or more subcontractors and the change is an increase in the agreed compensation, the overhead and profit percentage for the Contractor and each subcontractor shall be itemized separately.

14.6 Time for the City to Approve Extra Work: Any Extra Work in an amount up to and not exceeding a cumulative amount of $25,000 for a specific project can be approved by the City Manager and shall require a written Change Order proposal to be submitted to the Public Works Director for submittal and approval by the City Manager. Extra Work exceeding the cumulative amount of $25,000 for a specific project must be approved by the City Commission and a written Change Order proposal must be submitted to the Public Works Director for submittal and approval by the City Manager and City Commission. No financial or time claim for delay to the project resulting from the Change Order approval process outlined above under Section 14.6 will be allowed.

ARTICLE 15 – CHANGE OF THE CONTRACT TIME

15.1 The Contract Time may only be changed by a Change Order. Any claim for an extension in the Contract Time shall be based on written notice delivered to the Project Manager within five (5) days of the occurrence of the event giving rise to the claim. Any change in the Contract Time resulting from any such claim shall be incorporated in a Change Order.

15.2 The Contract Time will be extended in an amount equal to time lost due to delays beyond the control of the Contractor if a claim is made there for as provided in Paragraph 15.1. Such delays shall include but not be limited to, acts or neglect by the City, or to fires, floods, labor disputes, epidemics, abnormal weather conditions, or acts of God.

15.3 All time limits stated in the Contract Documents are of the essence. The provisions of this Article 15 shall not exclude recovery for damages for delay by the Contractor.

15.4 Delays caused by or resulting from entities, contractors or subcontractors who are not affiliated with the CONTRACTOR (non-affiliated Contractors) shall not give rise to a

SAMPLE CONSTRUCTION AGREEMENT

claim by the CONTRACTOR for damages for increases in material and/or labor costs. Such entities, contractors and subcontractors include, but are not limited to, the City's contractors and subcontractors, Florida Power and Light Company, AT&T and Florida East Coast Railway, LLC.

ARTICLE 16 – LIQUIDATED DAMAGES

16.1 Upon failure of the Contractor to complete the Work within the time specified for completion, the Contractor shall pay to the City the sum of **Five Hundred Dollars ($500.00)** for each and every calendar day that the completion of the Work is delayed beyond the time specified in this Agreement for completion, as fixed and agreed liquidated damages and not as a penalty, so long as the delay is caused by the Contractor. Should an act of God or the acts or omissions of the City, its agents or representatives, in derogation to the terms of this Agreement cause the delay, the Contractor shall not be responsible for the delay nor liquidated damages. Liquidated damages are fixed and agreed upon between the Parties, recognizing the impossibility of precisely ascertaining the amount of damages that will be sustained by the City as a consequence of such delay and both parties desiring to obviate any question of dispute concerning the amount of damages and the cost and effect of the failure of the Contractor to complete the Work on time. Liquidated damages shall apply separately to each portion of the Work for which a time of completion is given. The City shall have the right to deduct from or retain any compensation which may be due or which may become due and payable to the Contractor the amount of liquidated damages, and if the amount retained by the City is insufficient to pay in full such liquidated damages, the Contractor shall pay all liquidated damages in full. The Contractor shall be responsible for reimbursing the City, in addition to liquidated damages or other damages for delay, for all costs of engineering, architectural fees, and inspection and other costs incurred in administering the construction of the Project beyond the completion date specified or beyond an approved extension of time granted to the Contractor whichever is later. Delays caused by or resulting from entities, contractors or subcontractors who are not affiliated with the Contractor shall not give rise to a claim by Contractor for damages for increase in material and/or labor costs. Such entities, contractors and subcontractors include, but are not limited to, the CITY's contractors and subcontractors, Florida Power and Light Company, AT&T, and Florida East Coast Railway, LLC.

16.2 No Extended Damages: For other and additional good and valuable consideration the receipt and sufficiency of which is hereby acknowledged, the Contractor covenants and agrees that in the event of any delay of construction or for any reason, allegation or claim, and notwithstanding the reason of the delay, reason, claim or allegation or who caused them or the construction delay or whether they were caused by the City, that there will be no entitlement to Contractor to or for any direct or indirect financial damages or losses for extended corporate overhead impact, extended project overhead impacts, project support services, mobilization or demobilization or by whatever other label or legal concept or theory and types of names or labels or basis such claims may have, or any business damages or losses of whatever type or nature, and Contractor hereby waives any right to make any such claim or claims. This provision will have application and effect when construction delays are anticipated and agreed upon by both the City and the Contractor.

SAMPLE CONSTRUCTION AGREEMENT

ARTICLE 17 – SUSPENSION OF WORK AND TERMINATION

17.1 City May Suspend Work: The City may, at any time and without cause, suspend the Work or any portion of the Work for a period of not more than ninety (90) days by notice in writing to the Contractor which shall fix the date on which Work shall be resumed. The Contractor shall resume the Work on the date fixed. The Contractor will be allowed an increase in the Contract Price or an extension of the Contract Time, or both, directly attributable to any suspension, if the Contractor makes a claim as provided in Articles 14 and 15.

17.2 City May Terminate Work: The City retains the right to terminate this Agreement, with thirty (30) days prior written notice. Additionally, the City may also terminate this Agreement upon 15 days' notice upon the occurrence of any one or more of the following events:

17.2.1 If the Contractor commences a voluntary case or a petition is filed against the Contractor, under any chapter of the Bankruptcy Code, or if the Contractor takes any equivalent or similar action by filing a petition or otherwise under any other federal or state law in effect at such time relating to the bankruptcy or insolvency.

17.2.2 If the Contractor makes a general assignment for the benefit of creditors.

17.2.3 If a trustee, receiver, custodian or agent of the Contractor is appointed under applicable law or under Contract, whose appointment or authority to take charge of property of the Contractor is for the purpose of enforcing a lien against such property or for the purpose of general administration of such property for the benefit of the Contractor's creditors.

17.2.4 If the Contractor persistently fails to perform the Work in accordance with the Contract Documents, including but not limited to, failure to supply sufficient skilled Workers or suitable materials or equipment or failure to adhere to the progress schedule as same may be revised from time to time.

17.2.5 If the Contractor repeatedly fails to make prompt payments to subcontractors or for labor, material or equipment.

17.2.6 If the Contractor repeatedly disregards proper safety procedures.

17.2.7 If the Contractor disregards any local, state or federal laws or regulations.

17.2.8 If the Contactor otherwise violates any provisions of this Agreement.

17.3 Further, the Contractor may be excluded from the Work site and the City take possession of the Work and of all the Contractor's tools, appliances, construction equipment and machinery at the site and use them without liability to the City for trespass or conversion, incorporate in the Work all materials and equipment stored at the site or for which the City has paid the Contractor but which are stored elsewhere, and finish the Work as the City may deem expedient. In this instance, the Contractor shall not be entitled to receive any further compensation until the Work is finished.

SAMPLE CONSTRUCTION AGREEMENT

No Extended Damages: For other and additional good and valuable consideration the receipt and sufficiency of which is hereby acknowledged, the Contractor covenants and agrees that in the event of any delay of construction or for any reason, allegation or claim, and notwithstanding the reason of the delay, reason, claim or allegation or who caused them or the construction delay or whether they were caused by the City, that there will be no entitlement to Contractor to or for any direct or indirect financial damages or losses for extended corporate overhead impact, extended project overhead impacts, project support services, mobilization or demobilization or by whatever other label or legal concept or theory and types of names or labels or basis such claims may have, or any business damages or losses of whatever type or nature, and Contractor hereby waives any right to make any such claim or claims. This provision will have application and effect when construction delays are anticipated and agreed upon by both the City and the Contractor.

17.4 If the Contractor commits a default due to its insolvency or bankruptcy, the following shall apply:

17.4.1 Should this Agreement be entered into and fully executed by the parties, funds released and the Contractor (Debtor) files for bankruptcy, the following shall occur:

17.4.1.1 In the event the Contactor files a voluntary petition under 11 U.S.C. 301 or 302, or an order for relief is entered under 11 U.S.C. 303, the Contractor shall acknowledge the extent, validity, and priority of the lien recorded in favor of the City. The Contractor further agrees that in the event of this default, the City shall, at its option, be entitled to seek relief from the automatic stay pursuant to 11 U.S.C. 362. The City shall be entitled to relief from the automatic stay pursuant to 11 U.S.C. 362(d) (1) or (d) (2), and the Contactor agrees to waive the notice provisions in effect pursuant to 11 U.S.C. 362 and any applicable Local Rules of the United States Bankruptcy Court. The Contactor acknowledges that such waiver is done knowingly and voluntarily.

17.4.1.2 Alternatively, in the event the City does not seek stay relief, or if stay relief is denied, the City shall be entitled to monthly adequate protection payments within the meaning of 11 U.S.C. 361. The monthly adequate protection payments shall each be in an amount determined in accordance with the Note and Mortgage executed by the Contractor in favor of the City.

17.4.1.3 In the event the Contractor files for bankruptcy under Chapter 13 of Title 11, United States Code in additional to the foregoing provisions, the Contractor agrees to cure any amounts in arrears over a period not to exceed twenty-four (24) months from the date of the confirmation order, and such payments shall be made in addition to the regular monthly payments required by the Note and mortgage. Additionally, the Contractor shall agree that the City is over secured and, therefore, entitled to interest and attorney's fees pursuant to 11 U.S.C. 506(b). Such fees shall be allowed and payable as an administrative expense. Further, in the event the Contractor has less

SAMPLE CONSTRUCTION AGREEMENT

than five (5) years of payments remaining on the Note, the Contractor agrees that the treatment afforded to the claim of the City under any confirmed plan of reorganization shall provide that the remaining payments shall be satisfied in accordance with the Note, and that the remaining payments or claim shall not be extended or amortized over a longer period than the time remaining under the Note.

17.4.2 Should this Agreement be entered into and fully executed by the parties, and the funds have not been forwarded to Contractor, the following shall occur:

17.4.2.1 In the event the Contractor files a voluntary petition pursuant to 11 U.S.C. 301 or 302, or an order for relief is entered under 11 U.S.C. 303., the Contractor acknowledges that the commencement of a bankruptcy proceeding constitutes an event of default under the terms of this Agreement. Further, the Contractor acknowledges that this Agreement constitutes an executor contract within the meaning of 11 U.S.C. 365. The Contractor acknowledges that this Agreement is not capable of being assumed pursuant to 11 U.S.C. 365(c)(2), unless the City expressly consents in writing to the assumption. In the event the City consents to the assumption, the Contractor agrees to file a motion to assume this Agreement within ten (10) days after receipt of written consent from the City, regardless of whether the bankruptcy proceeding is pending under Chapter 7, 11, or 13 of Title 11 of the United States Code. The Contractor further acknowledges that this Agreement is not capable of being assigned pursuant to 11 U.S.C. 365(b)(1).

17.5 Where the Contractor's service have been so terminated by the City, the termination shall not affect any rights of the City against the Contractor then existing or which may thereafter accrue. Any retention or payment of moneys due the Contractor by the City will not release the Contractor from liability.

17.6 The Contractor has no right, authority or ability to terminate the Work except for the wrongful withholding of any payments due the Contractor from the City.

ARTICLE 18 – NOTICES

18.1 All notices required by any of the Contract Documents shall be in writing and shall be deemed delivered upon mailing by certified mail, return receipt requested to the following:

To the City:

City Manager
City of Fort Lauderdale
100 North Andrews Avenue
Fort Lauderdale, Florida 33301

SAMPLE CONSTRUCTION AGREEMENT

with copy to the

Project Manager and City Attorney
City of Fort Lauderdale
100 North Andrews Avenue
Fort Lauderdale, Florida 33301

To the Contractor:

_____
_____
_____
_____
_____
_____

SAMPLE CONSTRUCTION AGREEMENT

ARTICLE 19 – LIMITATION OF LIABILITY

19.1 The City desires to enter into this Agreement only if in so doing the City can place a limit on the City's liability for any cause of action arising out of this Agreement, so that the City's liability for any breach never exceeds the sum of $1. For other good and valuable consideration, the receipt and sufficiency of which is hereby acknowledged, the Contractor expresses its willingness to enter into this Agreement with the knowledge that the Contractor's recovery from the City to any action or claim arising from the Agreement is limited to a maximum amount of $1,000, which amount shall be reduced by the amount actually paid by the City to the Contractor pursuant to this Agreement, for any action or claim arising out of this Agreement. Nothing contained in this paragraph or elsewhere in this Agreement is in any way intended either to be a waiver of the limitation placed upon the City's liability as set forth in Section 768.28, Florida Statutes, or to extend the City's liability beyond the limits established in said Section 768.28; and no claim or award against the City shall include attorney's fees, investigative costs, expert fees, suit costs or pre-judgment interest.

19.2 No Extended Damages: For other and additional good and valuable consideration the receipt and sufficiency of which is hereby acknowledged, the Contractor covenants and agrees that in the event of any delay of construction or for any reason, allegation or claim, and notwithstanding the reason of the delay, reason, claim or allegation or who caused them or the construction delay or whether they were caused by the City, that there will be no entitlement to Contractor to or for any direct or indirect financial damages or losses for extended corporate overhead impact, extended project overhead impacts, project support services, mobilization or demobilization or by whatever other label or legal concept or theory and types of names or labels or basis such claims may have, or any business damages or losses of whatever type or nature, and Contractor hereby waives any right to make any such claim or claims. This provision will have application and effect when construction delays are anticipated and agreed upon by both the City and the Contractor.

ARTICLE 20 – GOVERNING LAW

20.1 This Agreement shall be governed by the laws of the State of Florida. Both Parties agree that the courts of the State of Florida shall have jurisdiction of any claim arising in connection with this Agreement. Venue for any claim, objection or dispute arising out of this Agreement shall be in Broward County, Florida.

ARTICLE 21 – MISCELLANEOUS

21.1 The duties and obligations imposed by this Agreement and the rights and remedies available to the parties and, in particular but without limitation, the warranties, guaranties and obligations imposed upon the Contractor and all of the rights and remedies available to the City, are in addition to, and are not to be construed in any way as a limitation of, any rights and remedies available to any or all of them which are otherwise imposed or available by laws or regulations, by special warranty or guarantee or by other provisions of the Contract Documents, and the provisions of this Paragraph will be as effective as if repeated specifically in the Contract Documents, and the provisions of this Paragraph will survive final payment and termination or completion of this Agreement.

21.2 The Contractor shall not assign or transfer this Agreement or its rights, title or interests. The obligations undertaken by the Contractor pursuant to this Agreement shall not be delegated or assigned to any other person or firm. Violation of the terms of this Paragraph shall constitute a material breach of Agreement by the Contractor and the City any, at its discretion, cancel this Agreement and all rights, title and interest of the Contractor which shall immediately cease and terminate.

21.3 The Contractor and its employees, volunteers and agents shall be and remain an independent contractors and not agents or employees of the City with respect to all of the acts and services performed by and under the terms of this Agreement. This Agreement shall not in any way be constructed to create a partnership, association or any other kind of joint undertaking or venture between the Parties.

21.4 The City reserves the right to audit the records of the Contractor relating in any way to the Work to be performed pursuant to this Agreement at any time during the performance and term of this Agreement and for a period of three (3) years after completion and acceptance by the City. If required by the City, the Contractor agrees to submit to an audit by an independent certified public accountant selected by the City. The Contractor shall allow the City to inspect, examine and review the records of the Contractor at any and all times during normal business hours during the term of this Agreement.

21.5 The remedies expressly provided in this Agreement to the City shall not be deemed to be exclusive but shall be cumulative and in addition to all other remedies in favor of the City now or later existing at law or in equity.

21.6 Should any part, term or provisions of this Agreement be decided by the courts to be invalid, illegal or in conflict with any state or federal law, the validity of the remaining portion or provision shall not be affected.

SAMPLE CONSTRUCTION AGREEMENT

IN WITNESS WHEREOF, the Parties have caused this Agreement to be executed as follows:

CONTRACTOR:

WITNESSES:

_____
(Signature)

_____
(Witness print/type name)

_____
(Signature)

_____
(Witness print/type name)

(Corporate Seal)

(insert contractor's name)

By:_____
(Signature)

_____
(Print Name and Title)

Attest:

By:_____
(Signature)

_____
(Print/type name)

CITY:

City of Fort Lauderdale, a municipal corporation of the State of Florida

By:_____
LEE R. FELDMAN, City Manager

(Corporate Seal)

ATTEST:

By:_____
JONDA K. JOSEPH, City Clerk

APPROVED AS TO FORM:

By:_____
CARRIE L. SARVER
Assistant City Attorney

SAMPLE CONSTRUCTION AGREEMENT

ACKNOWLEDGEMENT OF CONTRACTOR

STATE OF: _____

COUNTY OF:_____

The foregoing instrument was acknowledged before me this _____ day of_____ ,

20_____ , by_____ and_____ ,

as _____ and_____ , respectively,

of _____, a_____

corporation, on behalf of the corporation, who is ☐ personally known to me or ☐ has produced

_____ as identification.

(SEAL)

_____
Notary Public, State of Florida
(Signature of Notary taking Acknowledgement)

_____
Name of Notary Typed, Printed or Stamped

My Commission Expires:

_____
Commission Number

SAMPLE CONSTRUCTION AGREEMENT

GENERAL CONDITIONS

Unless otherwise modified in the projects special conditions, the following General Conditions shall be part of the Contract:

GC - 01 - DEFINITIONS - The following words and expressions, or pronouns used in their stead, shall wherever they appear in the Contract and the Contract Documents, be construed as follows:

"Addendum" or "Addenda" - shall mean the additional Contract provisions issued in writing, by the Engineer, prior to the receipt of bids.

"Bid" – shall mean the offer or proposal of the Bidder submitted on the prescribed form setting forth the prices for the Work to be performed.

"Bidder" – shall mean any person, firm, company, corporation or entity submitting a Bid for the Work.

"Bonds" –shall mean Bid, performance and payment bonds and other instruments of security, furnished by Contractor and his surety in accordance with the Contract Documents.

“City” – shall mean the City of Fort Lauderdale, Florida, a Florida municipal corporation. In the event the City exercises its regulatory authority as a government body, the exercise of such regulatory authority and the enforcement of any rules, regulations, codes, laws and ordinances shall be deemed to have occurred pursuant to City’s authority as a governmental body and shall not be attributable in any manner to the City as a party to this Contract. For the purpose of this Contract, “City” without modification shall mean the City Commission, and/or City Manager or his/her designees(s)as applicable.

"Public Works Director" –shall mean the Public Works Director of the City of Fort Lauderdale, Florida or his/her designee(s).

"Consultant" – shall mean a person, firm, company, corporation or other entity employed by the City to perform the professional services for the project.

“Contract Work” - shall mean everything expressed or implied to be required to be furnished and furnished by the Contractor by any one or more of the parts of the Contract Documents referred to in the Contract hereof except Extra Work as hereinafter defined, it being understood that, in case of any inconsistency in or between any part or parts of this Contract, the Public Works Director shall determine which shall prevail.

“Design Documents” – shall mean the construction plans and specifications included as part of a Bid/Proposal Solicitation prepared either by the City or by the Consultant under a separate Agreement with the City.

"Extra Work" - shall mean work other than that required by the Contract.

"Inspector" – shall mean an authorized representative of the City assigned to make necessary inspections of materials furnished by Contractor and of the Work performed by Contractor.

"Notice" - shall mean written notice sent by certified United States Mail, return receipt requested, or sent by commercial express carrier with acknowledgement of delivery, or via fax or email, or by

hand delivery with a request for a written receipt of acknowledgment of delivery and shall be served upon the Contractor either personally or to its place of business listed in the Bid.

"Site" - shall mean the area upon or in which the Contractor's operations are carried out and such other areas adjacent thereto as may be designated as such by the Public Works Director.

"Subcontractor" - shall mean any person, firm, company, corporation or other entity, other than employees of the Contractor, who or which contracts with the contractor, to furnish, or actually furnishes labor and materials, or labor and equipment, or labor, materials and equipment at the site.

"Surety" - shall mean any corporation or entity that executes, as Surety, the Contractor's performance and payment bond securing the performance of this Contract.

GC - 02 - SITE INVESTIGATION AND REPRESENTATION - The Contractor acknowledges that it has satisfied itself as to the nature and location of the Work under the Contract Documents, the general and local conditions of the Site, particularly those bearing upon availability of transportation, disposal, handling and storage of materials, availability of labor, water, electric power, and roads, the conformation and conditions at the ground based on City provided reports, the type of equipment and facilities needed preliminary to and during the prosecution of the Work and all other matters which can in any way affect the Work or the cost thereof under the Contract Documents.

The Contractor acknowledges that it has conducted extensive tests, examinations and investigations and represents and warrants a thorough familiarization with the nature and extent of the Contract Documents, the Work, locality, soil conditions, moisture conditions and all year-round local weather and climate conditions (past and present), and, in reliance on such tests, examination and investigations conducted by Contractor and the Contractor’s experts, has determined that no conditions exist that would in any manner affect the Bid Price and that the project can be completed for the Bid Price submitted.

The Contractor, on its own, has made or caused to be made examinations, investigations, tests and studies of reports and related data in addition to those referred above, as Contractor deemed necessary to perform the Work at the Bid price set by the Contractor, within the contract time and in accordance with the other terms and conditions of the Contract Documents and the Bid made by the Contractor; and no additional examinations, investigations, tests, reports or similar data are, or will be, required by Contractor to assure that the Work can be done at the Bid price set by the Contractor.

The Contractor further acknowledges that it has satisfied itself based on any geotechnical reports the City may provide and inspection of the project Site as to the character, quality, and quantity of surface and subsurface materials to be encountered from inspecting the site and from evaluating information derived from exploratory work that may have been done by the City or included in the Contract Documents and finds and has further determined that no conditions exist that would in any manner affect the Bid price and that the project can be completed for the Bid price submitted..

Any failure by the Contractor to acquaint itself with all the provided information and information obtained by visiting the project Site will not relieve Contractor from responsibility for properly estimating the difficulty or cost thereof under the Contract Documents. In the event that the actual subsurface conditions vary from the actual City provided reports, the Contractor shall notify the City and the Contract amount may be adjusted depending on the conditions, at the approval of the City.

GC - 03 - SUBSTITUTIONS - If the Contractor desires to use materials and/or products of manufacturer's names different from those specified in the Contract Documents, the Bidder requesting the substitution shall make written application as described herein. The burden of proving the equality of the proposed substitution rests on the Bidder making the request. To be acceptable, the proposed substitution shall meet or exceed all expressed requirements of the Contract Documents and shall be submitted upon the Contractor's letterhead, in addition to the "Contractor's Request for Substitution" form provided by the Public Works Director. The following requirements shall be met in order for the substitution to be considered:

1. Requests for substitution shall reach the Public Works Director no less than ten (10) Working Days prior to the date set for opening of Bids; and

2. Requests for substitution shall be accompanied by such technical data, as the party making the request desires to submit. The Public Works Director will consider reports from reputable independent testing laboratories, verified experience records from previous users and other written information valid in the circumstances; and

3. Requests for substitution shall completely and clearly indicate in what respects the materials and/or products differ from those indicated in the Contract Documents; and

4. Requests for substitution shall be accompanied by the manufacturer's printed recommendations clearly describing the installation, use and care, as applicable, of the proposed substitutions; and

5. Requests for substitution shall be accompanied by a complete schedule of changes in the Contract Documents, if any, which must be made to permit the use of the proposed substitution; and

6. Provide the "Contractor's Request for Substitution" form, completely executed. Failure to provide all pertinent data will result in immediate rejection of such a request.

If a proposed substitution is approved by the Public Works Director, an Addendum will be issued to prospective bidders not less than three (3) working days prior to the date set for opening of Bids. Unless substitutions are received and approved as described above, the successful Bidder shall be responsible for furnishing materials and products in strict accordance with the Contract Documents.

GC - 04 - CONTROL OF THE WORK - The Public Works Director shall have full control and direction of the Work in all respects. The Public Works Director and/or his authorized designee(s) shall, at all times, have the right to inspect the Work and materials. The Contractor shall furnish all reasonable facilities for obtaining such information, as the Public Works Director may desire respecting the quality of the Work and materials and the manner of conducting the Work. Should the Contractor be directed or permitted to perform night Work, or to vary the period which work is ordinarily carried on in the daytime, he shall give ample notice to the Public Works Director so that proper and adequate inspection may be provided. Such Work shall be done only under such regulations as are furnished in writing by the Public Works Director, and no extra compensation shall be allowed to the Contractor therefore. In the event of night work, the Contractor shall furnish such light, satisfactory to the Public Works Director, as will insure proper inspection. Nothing herein contained shall relieve the Contractor from compliance with any and all City ordinances relating to noise or Work during prohibited hours.

The Contractor shall keep the Public Works Director informed, a reasonable time in advance, as to his need for grades and lines in order that the same may be furnished and all necessary measurements made for records and for payment with the minimum of inconvenience to the Public Works Director or of delay to the Contractor. The Contractor shall submit to the Public Works Director or Inspector on the job a written request outlining the streets, etc., for which the Contractor desires lines and grades. It is the intention not to delay the Work for the giving of lines and grades, but when necessary, work operations shall be suspended for such reasonable time as the Public Works Director may require for this purpose. However, such cost increases shall be authorized either by the City Manager and/or designee, or the City Commission based upon the purchasing threshold amounts provided for in Chapter 2 of the City of Fort Lauderdale's Code of Ordinances.

GC - 05 - SUBCONTRACTOR - The Contractor shall not sublet, in whole or any part of the Work without the written consent and approval of the Public Works Director. Within ten (10) days after official notification of starting date, the Contractor must submit in writing, to the Public Works Director, a list of all Subcontractors. No Work shall be done by any Subcontractor until such Subcontractor has been officially approved by the Public Works Director. A subcontractor not appearing on the original list will not be approved without written request submitted to the Public Works Director and approved by the Public Works Director. In all cases, the Contractor shall give his personal attention to the Work of the Subcontractors and the Subcontractor is liable to be discharged by the Contractor, at the direction of the Public Works Director, for neglect of duty, incompetence or misconduct.

Acceptance of any Subcontractor, other person, or organization by the Public Works Director shall not constitute a waiver of any right of Public Works Director to reject defective Work or Work not in conformance with the Contract Documents.

Contractor shall be fully responsible for all acts and omissions of his Subcontractors and of persons and organizations directly or indirectly employed by them and of persons and organizations for whose acts any of them may be liable to the same extent that he is responsible for the acts and omissions of persons directly employed by him. Nothing in the Contract Documents shall create any contractual relationship between City and any Subcontractor or other person or organization having a direct contract with Contractor, nor shall it create any obligation on the part of City to pay or to see to the payment of any moneys due to any Subcontractor or other person, or organization, except as may otherwise be required by law.

GC – 06 - QUANTITIES - It is mutually agreed that the proposal shows the approximate amounts only along with the Plans and the general location. It is also mutually agreed that no change will be made involving any departure from the general scheme of the Work and that no such change involving a material change in cost, either to the City or Contractor, shall be made, except upon written permission of the City. However, the Public Works Director shall have the right to make minor alternations in the line, grade, plan, form or materials of the Work herein contemplated any time before the completion of the same. That if such alterations shall diminish the quantity of the Work to be done, such alterations shall not constitute a claim for damages or anticipated profits. That if such alterations increase the amount of the Work to be done, such increase shall be paid for according to the quantity actually performed and at the unit price or prices stipulated therefore in the Contract.

The City shall, in all cases of dispute, determine the amount or quantity of the several kinds of Work which are to be paid for under this Contract, and shall decide all questions relative to the execution of the same, and such estimates and decisions shall be final and binding.

Any Work not herein specified, which might be fairly implied as included in the Contract, of which the City shall judge, shall be done by the Contractor without extra charge. However, such cost increases shall be authorized either by the City Manager and/or designee, or the City Commission based upon the purchasing threshold amounts provided for in Chapter 2 of the City of Fort Lauderdale's Code of Ordinances.

GC–07 - NO ORAL CHANGES - Except to the extent expressly set forth in the Contract, no change in or modification, termination or discharge of the Contract in any form whatsoever, shall be valid or enforceable unless it is in writing and signed by the parties charged, therewith or their duly authorized representative.

GC - 08 - PERMITS AND PROTECTION OF PUBLIC – Permits on file with the City and or those permits to be obtained shall be considered directive in nature and will be considered a part of this Contract. A copy of all permits shall be given to the City and become part of the Contract Documents. Terms of permits shall be met prior to acceptance of the Work and release of the final payment.

The Contractor shall be required to observe all the ordinances in relation to obtaining permits for occupying, excavating, or in any way obstructing the streets and alleys. He shall erect and maintain barricades and sufficient safeguards around all excavations, embankments or obstructions; he shall place sufficient warning lights at or near the Work; keep the same burning from sunset to sunrise, employ watchmen, and strictly obey all laws and ordinances controlling or limiting those engaged in similar work.

Where there are telephones, light or power poles, water mains, conduits, pipes or drains or other construction, either public or private, in or on the streets or alleys, the Work shall be so conducted that no interruption or delay will be caused in the operation or use of the same. Proper written notice shall be given, and all the facilities, afforded the owners of such construction encountered or likely to be encountered, as will enable them to preserve the same from injury.

The Contractor shall not be permitted to interfere with public travel and convenience by grading or tearing up streets indiscriminately, but the Work of constructing the various items in this contract shall proceed in an orderly, systematic and progressive manner.

Contractor shall not load nor permit any part of any structure to be loaded with weights that will endanger the structure, nor shall he subject any part of the Work to stresses or pressures that will endanger it.

Where lifting operations involving the use of specialized cranes are required as part of construction, Contractor must make undertake the following investigation and submit the results and documentation to the Engineer prior to commencing any lifting operations: marking a very specific area in the field for the placement of the crane; a drawing showing the limitations of the job operation (i.e. not over adjacent properties or pedestrian and high vehicular traffic areas);underground utility exploration in the vicinity of the crane location, which may include ground penetrating radar to identify voids or old pipe or other subsurface features that could lead to sudden failure; assessment of the underlying soil and roadway materials and a worst case analysis based on entire load being distributed on just one or two outriggers; provision of properly sized pads under the outriggers; loading charts from manufacturer showing allowable configurations/loads; and inspection to make sure crane operation is in accordance with the permit conditions.

GC - 09 - DISEASE REGULATIONS - The Contractor shall enforce all sanitary regulations and take all precautions against infectious diseases as the Public Works Director may deem necessary. Should any infectious or contagious diseases occur among his employees, he shall arrange for the immediate removal of the employee from the Site and isolation of all persons connected with the Work.

GC - 10 - CONTRACTOR TO CHECK PLANS, SPECIFICATIONS, AND DATA - The Contractor shall verify all dimensions, quantities, and details shown on the plans, supplementary drawings, schedules, or other data received from the Public Works Director, and shall notify the Public Works Director of all errors, omissions, conflicts and discrepancies found therein within three (3) working days of discovery. Failure to discover or correct errors, conflictions, or discrepancies shall not relieve the Contractor of full responsibility for unsatisfactory Work, faulty construction, or improper operation resulting there from nor from rectifying such condition at his own expense.

GC - 11 - SUPPLEMENTARY DRAWINGS - When, in the opinion of the Public Works Director, it becomes necessary to explain more fully the Work to be done, or to illustrate the work further, or to show any changes which may be required, drawings, known as supplementary drawings, with specifications pertaining thereto, will be prepared by the Public Works Director and copies will be given to the Contractor.

The supplementary drawings shall be binding upon the Contractor with the same force as the original Plans. Where such supplementary drawings require either less or more than the estimated quantities of work, credit to the City or compensations therefore to the Contractor shall be subject to the terms of the Contract.

GC - 12 - MATERIALS AND WORKMANSHIP - All material and workmanship shall, in every respect, be in conformity with approved modern practice and with prevailing standards of performance and quality. In the event of dispute the Public Works Director's decision shall be final. Wherever the Plans, specifications, Contract Documents, or the directions of the Public Works Director are unclear as to what is permissible and/or fail to note the quality of any Work, that interpretation will be made by the City Engineer, which is in accordance with approved modern practice, to meet the particular requirements of the Contract.

In all cases, new materials shall be used, unless this provision is waived by notice from the City in writing.

GC - 13 - SAFEGUARDING MARKS - The Contractor shall safeguard all points, stakes, grade marks, monuments, and bench marks made or established on the Work, bear the cost of re-establishing same if disturbed, or bear the entire expense of rectifying Work improperly installed due to not maintaining or protecting or for removing without authorization, such established points, stakes and marks. The Contractor shall safeguard all existing and known property corners, monuments and marks not related to the Work and, if required, shall bear the cost of having them re-established by a licensed surveyor if disturbed or destroyed during the course of construction.

GC - 14 - EXISTING UTILITY SERVICE - All existing utility service shall be maintained with a minimum of interruption at the expense of the Contractor.

GC - 15 - JOB DESCRIPTION SIGNS - Contractor shall furnish, erect, and maintain suitable weatherproof signs on jobs over $100,000 containing the following information:

1. City Seal (in colors)
2. Project or Improvement Number
3. Job Description
4. Estimated Cost
5. Completion Date

Minimum size of sign shall be four feet high, six feet wide and shall be suitably anchored. The entire sign shall be painted and present a pleasing appearance. Exact location of signs will be determined in the field. Two (2) signs will be required, one at each end of the job. All costs of this work shall be included in other parts of the work.

GC - 16 - FLORIDA EAST COAST RIGHT-OF-WAY - Whenever a City contractor is constructing within the Florida East Coast Railway Company's Right-of-Way, it will be mandatory that the contractor carry separate bodily injury and property damage insurance in the amounts as stated below. This insurance shall be taken out and maintained during the life of the Contract.

Bodily injury insurance in an amount not less than $500,000.00 for injuries, including wrongful death to any one person, and subject to the same limit for each person, in an amount not less than $1,000,000.00 on account of any one occurrence, and

Property damage insurance in an amount not less than $500,000.00 for damages on account of any one occurrence and in an amount not less than $1,000,000.00 for damages on account of all occurrences.

GC - 17 - ACCIDENTS - The Contractor shall provide such equipment and facilities as are necessary and/or required, in the case of accidents, for first aide services to be provided to a person who may be injured during the project duration. The Contractor shall also comply with the OSHA requirements as defined in the United States Labor Code 29 CFR 1926.50.

In addition, the Contractor must report immediately to the Public Works Director every accident to persons or damage to property, and shall furnish in writing full information, including testimony of witnesses regarding any and all accidents.

GC - 18 - SAFETY PRECAUTIONS - Contractor must adhere to the applicable environmental protection guidelines for the duration of a project. If hazardous waste materials are used, detected or generated at any time, the Project Manager must be immediately notified of each and every occurrence. The Contractor shall comply with all codes, ordinances, rules, orders and other legal requirements of public authorities (including OSHA, EPA, DERM, the City, Broward County, State of Florida, and Florida Building Code), which bear on the performance of the Work.

The Contractor shall take the responsibility to ensure that all Work is performed using adequate safeguards, including but not limited to: proper safe rigging, safety nets, fencing, scaffolding, barricades, chain link fencing, railings, barricades, steel plates, safety lights, and ladders that are necessary for the protection of its employees, as well as the public and City employees. All riggings and scaffolding shall be constructed with good sound materials, of adequate dimensions for their intended use, and substantially braced, tied or secured to ensure absolute safety for those required to use it, as well as those in the vicinity. All riggings, scaffolding, platforms, equipment guards, trenching, shoring, ladders and similar actions or equipment shall be OSHA approved, as applicable, and in accordance with all Federal, State and local regulations.

GC - 19 - DUST PREVENTION - The Contractor shall, by means of a water spray, or temporary asphalt pavement, take all necessary precautions to prevent or abate a dust nuisance arising from dry weather or Work in an incomplete stage. All costs of this Work shall be included in cost of other parts of the Work.

Should the Contractor fail to abate a dust nuisance by the above methods, and then he will be required to immediately construct temporary patches per City standards.

GC - 20 - PLACING BARRICADES AND WARNING LIGHTS - The Contractor shall furnish and place, at his own expense, all barricades, warning lights, automatic blinker lights and such devices necessary to properly protect the work and vehicular and pedestrian traffic. Should the Contractor fail to erect or maintain such barricades, warning lights, etc., the Public Works Director may, after 24 hours' notice to the Contractor, proceed to have such barricades and warning lights placed and maintained by City or other forces and all costs incurred thereof charged to the Contractor and may be retained by the City from any monies due, or to become due, to the Contractor.

GC - 21 - TRAFFIC CONTROL - The Contractor shall coordinate all Work and obtain, through the Engineering Department, any permits required to detour traffic or close any street before starting to work in the road. The following section: Part VI Traffic Controls for Street and Highway Construction and Maintenance Operations, MANUAL ON UNIFORM TRAFFIC CONTROL DEVICES, U.S. Department of Transportation Federal Highway Administration, 2009, or current edition, shall be used as a guide for requirement and placement of traffic control devices, signs and barricades. The Public Works Director shall determine requirements for the above. The above publication is available from the Superintendent of Documents, U.S. Government Printing Office, Washington, D.C. 20402. In the event that a Maintenance of Traffic (MOT) Plan is required, the Plan shall be prepared by an A.A.S.T.A. certified technician.

All traffic control devices, flashing lights, signs and barricades shall be maintained in working condition at all times.

GC - 22 - COORDINATION - The Contractor shall notify all utilities, transportation department, etc., in writing, with a copy to the Public Works Director before construction is started and shall coordinate his Work with them. The Contractor shall cooperate with the owners of any underground or overhead utility lines in their removal, construction and rearrangement operations in order that services rendered by these parties will not be unnecessarily interrupted.

The Contractor shall arrange his Work and dispose of his materials so as to not interfere with the operation of other Contractors engaged upon adjacent work and to join his Work to that of others in a proper manner and to perform his Work in the proper sequence in relation to that of other Contractors all as may be directed by the Public Works Director.

Each Contractor shall be responsible for any damage done by him or his agents to the work performed by another Contractor.

The Contractor shall contact the Broward County Transportation Department and the Florida Department of Transportation, as applicable, to verify and obtain location of any and all traffic conduits, loops, and street light underground services.

GC - 23 - WATER - Bulk water used for construction, flushing pipelines, and testing shall be obtained from fire hydrants. Contractor shall make payment for hydrant meter at Treasury Billing

Office, 1st Floor, City Hall, 100 N. Andrews Avenue. With the paid receipt, contractor can pick up hydrant meter at the utility location office. No connection shall be made to a fire hydrant without a meter connected.

GC - 24 - PROHIBITION AGAINST CONTRACTING WITH SCRUTINIZED COMPANIES - As provided for in Fla. Stat. §287.135 (3)(a)&(b), it is mutually agreed that if the Agreement is for goods or services in excess of $1 million or more entered into or renewed on or after July, 1, 2011, through June 30, 2012, the City has the authority to terminate the Agreement with Contractor if Contractor is found to have submitted a false certification as provided for in subsection (5) of Fla. Stat. 287.135 or has been placed on the Scrutinized Companies with Activities in Sudan List or the Scrutinized Companies with Activities in the Iran Petroleum Energy Sector List.

As provided for in Fla. Stat. §287.135(3)(a)&(b), it is mutually agreed that if the Agreement is for goods or services in excess of $1 million or more entered into or renewed on or after July 1, 2012, the City has the authority to terminate the Agreement with Contractor if Contractor is found to have submitted a false certification as provided under Fla. Stat. §287.135(5), been placed on the Scrutinized Companies with Activities in Sudan List or the Scrutinized Companies with Activities in the Iran Petroleum Energy Sector List, or been engaged in business operations in Cuba or Syria.

GC - 25 - LOCATION OF UNDERGROUND FACILITIES - If the Proposer, for the purpose of responding to this solicitation, requests the location of underground facilities through the Sunshine State One-Call of Florida, Inc. notification system or through any person or entity providing a facility locating service, and underground facilities are marked with paint, stakes or other markings within the City pursuant to such a request, then the Proposer shall be deemed non-responsive to this solicitation in accordance with Section 2-184(5) of the City of Fort Lauderdale Code of Ordinances.

GC - 26 – USE OF FLORIDA LUMBER TIMBER AND OTHER FOREST PRODUCTS - In accordance with Florida Statute 255.20 (3), The City specifies that lumber, timber, and other forest products used for this project shall be produced and manufactured in the state of Florida if such products are available and their price, fitness, and quality are equal. This requirement does not apply to plywood specified for monolithic concrete forms, if the structural or service requirements for timber for a particular job cannot be supplied by native species, or if the construction is financed in whole or in part from federal funds with the requirement that there be no restrictions as to species or place of manufacture.

The Bidder affirms by submitting a bid response to this solicitation that they will comply with section 255.20 (3) Florida Statutes.

Rev. 8/13/2013

SECTION 011000
SUMMARY

PART 1 - GENERAL

1.1 SUMMARY

A. This Section includes the following:

1. Work covered by the Contract Documents.
2. Work phases.
3. Work under other contracts.
4. Use of premises.
5. Owner's occupancy requirements.

1.2 RELATED DOCUMENTS

A. Drawings and general provisions of the Contract, including General and Supplementary Conditions and other Division 01 Specification Sections, apply to this Section.

B. "SPECIFICATIONS" referred to in the project documents are to include and incorporate the following:
1. The written specifications package entitled Project No. 11926, ROOFING CITY-WIDE.

1.3 WORK COVERED BY CONTRACT DOCUMENTS

A. Project Identifications: Flat and Steep Roof Projects throughout the City of Fort Lauderdale, Florida.

1. Project Locations: As shown in the specific work items..

B. Owner: The City of Ft. Lauderdale, Florida.

1. Owner's Representative: To be determined at time of individual contract award.

C. Architect: The City of Ft. Lauderdale Chief Architect.

D. The Work consists of the following:

1. The Work includes roofing repair and replacement on various existing City facilities. Types of roofs and repairs will vary and are dependent on individual building conditions.

a. Work shall be assigned through separate task orders for individual projects and task order amount shall be established based on quantities and unit prices for various components of the roofing systems as enumerated in the proposal form.

1.4 WORK PHASES

A. The Work shall be conducted in (2) phases in the following order, with each phase substantially complete before beginning the next phase. Contractor shall obtain and pay for all permits and engineering required for all re-roofing and replacement roofing under this contract:

1. Phase 1 (if required): The remediation or removal of any ACM in the existing roofing system as identified in an independently prepared asbestos survey. This work shall be performed in accordance with recommendations in the asbestos survey utilizing appropriate methods and personnel. This work shall be performed in accordance with appropriate Broward County DEP requirements.
2. Phase 2: The remaining roofing work identified in the individual task order.

B. Before commencing Work of each phase, submit a schedule showing the sequence, commencement and completion dates, and move-out and -in dates of Owner's personnel for all phases of the Work.

1.5 WORK UNDER OTHER CONTRACTS

A. General: Cooperate fully with separate contractors so work on those contracts may be carried out smoothly, without interfering with or delaying work under this Contract. Coordinate the Work of this Contract with work performed under separate contracts.

B. Preceding Work: Owner may award separate contract(s) for differing construction operations at Project site.

1. A separate contract may be awarded to other contractors to complete other roofing or repair projects.

C. Concurrent Work: Owner may award separate contract(s) for construction operations at Project site. Those operations may be conducted simultaneously with work under various roofing contracts awarded based on the unit prices contained in this proposal.

1. A separate contract may be awarded to other partial projects for roofing at the City.

1.6 USE OF PREMISES

A. General: Contractor shall have limited use of premises for construction operations as required and necessary to perform the Work or as identified in the specific project task order.

B. Use of Site: Limit use of premises to areas within the Contract limits established. Do not disturb portions of Project site beyond areas in which the Work is indicated.

1. Limits: Unless otherwise established in the individual project task order, confine construction operations to not interfere with the occupation of the building.
2. Owner Occupancy: Allow for Owner occupancy of Project site and use by the public.
3. Driveways and Entrances: Keep driveways parking garage, loading areas, and entrances serving premises clear and available to Owner, Owner's employees, and emergency vehicles at all times. Do not use these areas for parking or storage of materials.
   a. Schedule deliveries to minimize use of driveways and entrances.

b. Schedule deliveries to minimize space and time requirements for storage of materials and equipment on-site.

C. Maintain existing building in a weathertight condition throughout construction period. Repair damage caused by construction operations. Protect building and its occupants during construction period.

1.7 OWNER'S OCCUPANCY REQUIREMENTS

A. Unless otherwise established in the individual project task order, Owner will occupy the premises during entire construction period. Cooperate with Owner during construction operations to minimize conflicts and facilitate Owner usage. Perform the Work so as not to interfere with Owner's operations. Maintain existing exits, unless otherwise indicated.

1. Maintain access to existing walkways, corridors, and other adjacent occupied or used facilities. Do not close or obstruct walkways, corridors, or other occupied or used facilities without written permission from Owner and authorities having jurisdiction.

1.8 SPECIFICATION FORMATS AND CONVENTIONS

A. Specification Format: The Specifications are organized into Divisions and Sections using the format and CSI/CSC's "Masterformat" numbering system.
1. Division 01: Sections in Division 01 govern the execution of the Work of all Sections in the Specifications.

B. Specification Content: The Specifications use certain conventions for the style of language and the intended meaning of certain terms, words, and phrases when used in particular situations. These conventions are as follows:

1. Abbreviated Language: Language used in the Specifications and other Contract Documents is abbreviated. Words and meanings shall be interpreted as appropriate. Words implied, but not stated, shall be inferred as the sense requires. Singular words shall be interpreted as plural, and plural words shall be interpreted as singular where applicable as the context of the Contract Documents indicates.
2. Imperative mood and streamlined language are generally used in the Specifications. Requirements expressed in the imperative mood are to be performed by Contractor. Occasionally, the indicative or subjunctive mood may be used in the Section Text for clarity to describe responsibilities that must be fulfilled indirectly by Contractor or by others when so noted.

a. The words "shall," "shall be," or "shall comply with," depending on the context, are implied where a colon (:) is used within a sentence or phrase.

PART 2 - PRODUCTS (Not Used)

PART 3 - EXECUTION (Not Used)

END OF SECTION 011000

SECTION 012200
UNIT PRICES

PART 1 - GENERAL

1.1 SUMMARY

A. This Section includes administrative and procedural requirements for unit prices.

B. See Division 01 Section "Contract Modification Procedures" for procedures for using unit prices to adjust quantity allowances.

1.2 DEFINITIONS

A. Unit price is stated on the Bid Form, as a price per unit of measurement for materials or services added to or deducted from the Contract Sum by appropriate modification, if estimated quantities of Work required by the Contract Documents are increased or decreased. The proposal unit amounts will be used to determine the contract amount for each individual roofing project the City of Fort Lauderdale intends to issue a contract for.

1.3 PROCEDURES

A. Unit prices include all necessary material, plus cost for delivery, installation, insurance, applicable taxes, overhead, and profit.

B. Measurement and Payment: Refer to individual Specification Sections for work that requires establishment of unit prices. Methods of measurement and payment for unit prices are specified in those Sections, drawings and proposal information. Special areas, quantities and unit prices not addressed through this proposal and specification will be negotiated with the potential contractor using industry standard cost and area criteria.

C. Owner reserves the right to reject Contractor's measurement of work-in-place that involves use of established unit prices and to have this work measured, at Owner's expense, by an independent surveyor acceptable to Contractor.

PART 2 - PRODUCTS (Not Used)

PART 3 - EXECUTION (Not Used)

END OF SECTION 012200

SECTION 012600
CONTRACT MODIFICATION PROCEDURES

PART 1 - GENERAL

1.1 SUMMARY

A. This Section specifies administrative and procedural requirements for handling and processing Contract modifications once separate contracts are issued based on the unit prices given for the proposals contained in this set of documents.

B. See Division 01 Section "Unit Prices" for administrative requirements for using unit prices.

1.2 MINOR CHANGES IN THE WORK

A. Architect will issue supplemental instructions authorizing Minor Changes in the Work, not involving adjustment to the Contract Sum or the Contract Time, on standard City of Fort Lauderdale forms.

1.3 PROPOSAL REQUESTS

A. Owner-Initiated Proposal Requests: Architect will issue a detailed description of proposed changes in the Work that may require adjustment to the Contract Sum or the Contract Time. If necessary, the description will include supplemental or revised Drawings and Specifications.

1. Individual contract change requests issued by Architect are for information only. Do not consider them instructions either to stop work in progress or to execute the proposed change.
2. Within time specified in the individual contract change request, submit a quotation estimating cost adjustments based on specific quantities to the Contract Sum and the Contract Time necessary to execute the change.

    a. Include a list of quantities of products required or eliminated and unit costs, with total amount of purchases and credits to be made. If requested, furnish survey data to substantiate quantities.
    b. Indicate applicable taxes, delivery charges, equipment rental, and amounts of trade discounts.
    c. Include costs of labor and supervision directly attributable to the change.
    d. Include an updated Contractor's Construction Schedule that indicates the effect of the change, including, but not limited to, changes in activity duration, start and finish times, and activity relationship. Use available total float before requesting an extension of the Contract Time.

B. Contractor-Initiated Proposals: If latent or unforeseen conditions require modifications to the Contract, Contractor may propose changes by submitting a request for a change to Architect.

1. Include a statement outlining reasons for the change and the effect of the change on the Work. Provide a complete description of the proposed change. Indicate the effect of the proposed change on the Contract Sum and the Contract Time.

2. Include a list of quantities of products required or eliminated and unit costs, with total amount of purchases and credits to be made. If requested, furnish survey data to substantiate quantities.
3. Indicate applicable taxes, delivery charges, equipment rental, and amounts of trade discounts.
4. Include costs of labor and supervision directly attributable to the change.
5. Include an updated Contractor's Construction Schedule that indicates the effect of the change, including, but not limited to, changes in activity duration, start and finish times, and activity relationship. Use available total float before requesting an extension of the Contract Time.
6. Comply with requirements in Division 01 Section "Product Requirements" if the proposed change requires substitution of one product or system for product or system specified.

C. Proposal Request Form: Use forms provided by the City of Fort Lauderdale contained in the front end of this package or if not addressing a specific item, contractor to list item clearly on separate sheet and assign the appropriate unit cost with such.

1.4 ALLOWANCES

A. Allowance Adjustment: To adjust allowance amounts if provided for on individual contracts, base each Change Order proposal on the difference between purchase amount and the allowance, multiplied by final measurement of work-in-place. If applicable, include reasonable allowances for cutting losses, tolerances, mixing wastes, normal product imperfections, and similar margins.

1. Include installation costs in purchase amount only where indicated as part of the allowance.
2. If requested, prepare explanation and documentation to substantiate distribution of overhead costs and other margins claimed.
3. Submit substantiation of a change in scope of work, if any, claimed in Change Orders related to unit-cost allowances.
4. Owner reserves the right to establish the quantity of work-in-place by independent quantity survey, measure, or count.

1.5 CHANGE ORDER PROCEDURES

A. On Owner's approval of a Proposal Request, Architect will issue a Change Order for signatures of Owner and Contractor on standard City of Fort Lauderdale form.

1.6 CONSTRUCTION CHANGE DIRECTIVE

A. Construction and Work Change Directive: Architect may issue a Construction Change Directive on the City of Fort Lauderdale form. Construction Change Directive instructs Contractor to proceed with a change in the Work, for subsequent inclusion in a Change Order.

1. Construction Change Directive contains a complete description of change in the Work. It also designates method to be followed to determine change in the Contract Sum or the Contract Time.

B. Documentation: Maintain detailed records on a time and material basis of work required by the Construction Change Directive.

1. After completion of change, submit an itemized account and supporting data necessary to substantiate cost and time adjustments to the Contract.

PART 2 - PRODUCTS (Not Used)

PART 3 - EXECUTION (Not Used)

END OF SECTION 012600

SECTION 012900

PAYMENT PROCEDURES

PART 1 - GENERAL

1.1 RELATED DOCUMENTS

A. Drawings and general provisions of the Contract, including General and Supplementary Conditions and other Division 01 Specification Sections, apply to this Section.

1.2 SUMMARY

A. This Section specifies administrative and procedural requirements necessary to prepare and process Applications for Payment.

B. Related Sections include the following:

1. Division 01 Section "Contract Modification Procedures" for administrative procedures for handling changes to the Contract.

2. Division 01 Section "Unit Prices" for administrative requirements governing use of unit prices.

3. Division 01 Section "Construction Progress Documentation" for administrative requirements governing preparation and submittal of Contractor's Construction Schedule and Submittals Schedule.

1.3 DEFINITIONS

A. Schedule of Values: A statement furnished by Contractor allocating portions of the Contract Sum to various portions of the Work and used as the basis for reviewing Contractor's Applications for Payment.

1.4 SCHEDULE OF VALUES

A. Coordination: Coordinate preparation of the Schedule of Values with preparation of Contractor's Construction Schedule.

1. Correlate line items in the Schedule of Values with other required administrative forms and schedules, including the following:

   a. City’s Form - Periodic Estimate for Partial Payment.
   b. Submittals Schedule.
   c. Contractor's Construction Schedule.

2. Submit the Schedule of Values to City Representative at earliest possible date but no later than seven days before the date scheduled for submittal of initial Applications for Payment.

B. Format and Content: Use the Project Manual table of contents as a guide to establish line

items for the Schedule of Values.

1. Identification: Include the following Project identification on the Schedule of Values:

    a. Project name and location.
    b. Project Number
    c. Contractor's name and address.
    d. Date of submittal.

2. Arrange the Schedule of Values in tabular form with separate columns to indicate the following for each item listed:

    a. Related Specification Section or Division.
    b. Description of the Work.
    c. Name of subcontractor.
    d. Name of manufacturer or fabricator.
    e. Name of supplier.
    f. Change Orders (numbers) that affect value.
    g. Dollar value.

        1) Percentage of the Contract Sum to nearest one-hundredth percent, adjusted to total 100 percent.

3. Provide a breakdown of the Contract Sum in enough detail to facilitate continued evaluation of Applications for Payment and progress reports. Coordinate with the Project Manual table of contents. Provide several line items for principal subcontract amounts, where appropriate.

4. Round amounts to nearest whole dollar; total shall equal the Contract Sum.

5. Provide a separate line item in the Schedule of Values for each part of the Work where Applications for Payment may include materials or equipment purchased or fabricated and stored, but not yet installed.

    a. Differentiate between items stored on-site and items stored off-site. If specified, include evidence of insurance or bonded warehousing.

6. Provide separate line items in the Schedule of Values for initial cost of materials, for each subsequent stage of completion, and for total installed value of that part of the Work.

7. Allowances: Provide a separate line item in the Schedule of Values for each allowance. Show line-item value of unit-cost allowances, as a product of the unit cost, multiplied by measured quantity. Use information indicated in the Contract Documents to determine quantities.

8. Each item in the Schedule of Values and Applications for Payment shall be complete. Include total cost and proportionate share of general overhead and profit for each item.

    a. Temporary facilities and other major cost items that are not direct cost of actual work-in-place may be shown either as separate line items in the Schedule of Values or distributed as General Conditions expense, at Contractor's option.

9. Schedule Updating: Update and resubmit the Schedule of Values before the next Applications for Payment when Change Orders or Construction Change Directives result in a change in the Contract Sum.

1.5 APPLICATIONS FOR PAYMENT

A. The General Contractor must meet with the City Representative on or about the 25th of each month. The City Representative will go over the pay items and agree on the quantities and the dollar amounts of the work completed during the month. A copy of the agreed amounts will be signed by the parties and a copy will be left with each representative.

B. The General Contractor will make up a partial pay request using the City-supplied forms and submit the request to the City Representative before the first of the upcoming month.

C. Each pay request must be accompanied by a partial release of lien by the General Contractor and by all Subcontractors, suppliers, and for all labor, as outlined below.

1. Starting with the second (2nd) pay request and for each and every pay request thereafter, the General Contractor shall submit partial release of liens from all Subcontractors, suppliers, and laborers covering the preceding month's request (SEE FOLLOWING EXAMPLE).
2. EXAMPLE: In the first (1st) pay request, payment is requested by General Contractor for the asbestos contractor and the electrician. The General Contractor must attach his partial release of lien.
3. For the second (2nd) pay request, the General Contractor must attach his partial release of lien from the asbestos contractor and the electrician for the amounts billed in the 1st pay request; i.e., the General Contractor will be running one (1) month behind with the releases from the Subcontractors, suppliers, etc., until the final pay request.

D. For the final pay request, the General Contractor will be required to submit FINAL release of liens for ALL Subcontractors, suppliers, etc., and for ALL labor BEFORE FINAL PAYMENT WILL BE MADE.

E. No partial payments, after the first payment, will be made until all partial release of liens are submitted for the preceding month's billing, as described

F. Each Application for Payment shall be consistent with previous applications and payments as certified by and paid for by City.

G. Payment Application Forms: Use City Form “PERIODIC ESTIMATE FOR PARTIAL PAYMENT” as form for Applications for Payment.

1. Application Preparation: Complete every entry on form. Notarize and execute by a person authorized to sign legal documents on behalf of Contractor. City will return incomplete applications without action.

2. Entries shall match data on the Schedule of Values and Contractor's Construction Schedule. Use updated schedules if revisions were made.
3. Include amounts of Change Orders and Construction Change Directives issued before last day of construction period covered by application.

H. Release of Lien: With each Application for Payment, submit release of lien from every entity

who is lawfully entitled to file a mechanic's lien arising out of the Contract and related to the Work covered by the payment.

1. Submit partial release of lien on each item for amount requested in previous application, after deduction for retainage, on each item.
2. When an application shows completion of an item, submit final release of lien.
3. City reserves the right to designate which entities involved in the Work must submit release of lien forms.

I. Initial Application for Payment: Administrative actions and submittals that must precede or coincide with submittal of first Application for Payment include the following:

1. List of subcontractors.
2. Schedule of Values.
3. Contractor's Construction Schedule (preliminary if not final).
4. Products list.
5. Schedule of unit prices.
6. Submittals Schedule (preliminary if not final).
7. List of Contractor's staff assignments.
8. List of Contractor's principal consultants.
9. Copies of building permits.
10. Copies of authorizations and licenses from authorities having jurisdiction for performance of the Work.
11. Initial progress report.
12. Report of preconstruction conference.
13. Certificates of insurance and insurance policies.
14. Performance and payment bonds.
15. Data needed to acquire City's insurance.
16. Initial settlement survey and damage report if required.

J. Final Payment Application: Submit final Application for Payment with releases and supporting documentation not previously submitted and accepted, including, but not limited, to the following:

1. Evidence of completion of Project closeout requirements.
2. Insurance certificates for products and completed operations where required and proof that taxes, fees, and similar obligations were paid.
3. Updated final statement, accounting for final changes to the Contract Sum.
4. Evidence that claims have been settled.
5. Final meter readings for utilities, a measured record of stored fuel, and similar data as of date of Substantial Completion or when City took possession of and assumed responsibility for corresponding elements of the Work.
6. Final, liquidated damages settlement statement.

PART 2 - PRODUCTS (Not Used)

PART 3 - EXECUTION (Not Used)

END OF SECTION 012900

SECTION 013100
PROJECT MANAGEMENT AND COORDINATION

PART 1 - GENERAL

1.1 SUMMARY

A. This Section includes administrative provisions for coordinating construction operations on Project including, but not limited to, the following:

1. Coordination Drawings.
2. Project meetings.
3. Requests for Interpretation (RFIs).

B. See Division 01 Section "Multiple Contract Summary" for a description of the division of Work among separate contracts and responsibility for coordination activities not in this Section.

C. See Division 01 Section "Execution" for procedures for coordinating general installation and field-engineering services, including establishment of benchmarks and control points.

1.2 DEFINITIONS

A. RFI: Request from Contractor seeking interpretation or clarification of the Contract Documents.

1.3 COORDINATION

A. Coordination: Coordinate construction operations included in different Sections of the Specifications to ensure efficient and orderly installation of each part of the Work. Coordinate construction operations, included in different Sections that depend on each other for proper installation, connection, and operation.

1. Schedule construction operations in sequence required to obtain the best results where installation of one part of the Work depends on installation of other components, before or after its own installation.

2. Coordinate installation of different components with other contractors to ensure maximum accessibility for required maintenance, service, and repair.

3. Make adequate provisions to accommodate items scheduled for later installation.

4. Where availability of space is limited, coordinate installation of different components to ensure maximum performance and accessibility for required maintenance, service, and repair of all components, including mechanical and electrical.

B. Administrative Procedures: Coordinate scheduling and timing of required administrative procedures with other construction activities and activities of other contractors to avoid conflicts and to ensure orderly progress of the Work. Such administrative activities include, but are not limited to, the following:

1. Preparation of Contractor's Construction Schedule.
2. Preparation of the Schedule of Values.

3. Installation and removal of temporary facilities and controls.
4. Delivery and processing of submittals.
5. Progress meetings.
6. Preinstallation conferences.
7. Project closeout activities.
8. Startup and adjustment of systems.
9. Project closeout activities.

1.4 SUBMITTALS

A. Coordination Drawings: Prepare Coordination Drawings if limited space availability necessitates maximum utilization of space for efficient installation of different components or if coordination is required for installation of products and materials fabricated by separate entities.

1. Content: Project-specific information, drawn accurately to scale. Do not base Coordination Drawings on reproductions of the Contract Documents or standard printed data. Include the following information, as applicable:

   a. Indicate functional and spatial relationships of components of architectural, structural, civil, mechanical, and electrical systems.

   b. Indicate dimensions shown on the Contract Drawings and make specific note of dimensions that appear to be in conflict with submitted equipment and minimum clearance requirements. Provide alternate sketches to Architect for resolution of such conflicts. Minor dimension changes and difficult installations will not be considered changes to the Contract.

2. Sheet Size: At least 8-1/2 by 11 inches(215 by 280 mm) but no larger than 30 by 40 inches(750 by 1000 mm).

3. Number of Copies: Submit two opaque copies of each submittal. Architect will return one copy.

4. Refer to individual Sections for Coordination Drawing requirements for Work in those Sections.

1.5 PROJECT MEETINGS

A. General: Schedule and conduct meetings and conferences at Project site, unless otherwise indicated.

1. Attendees: Inform participants and others involved, and individuals whose presence is required, of date and time of each meeting. Notify Owner and Architect of scheduled meeting dates and times.

2. Agenda: Prepare the meeting agenda. Distribute the agenda to all invited attendees.

3. Minutes: Record significant discussions and agreements achieved. Distribute the meeting minutes to everyone concerned, including Owner and Architect, within three days of the meeting.

B. Preconstruction Conference: Schedule a preconstruction conference before starting construction, at a time convenient to Owner and Architect, but no later than 15 days after execution of the Agreement. Hold the conference at Project site or another convenient location. Conduct the meeting to review responsibilities and personnel assignments.

1. Attendees: Authorized representatives of Owner, Architect, and their consultants; Contractor and its superintendent; major subcontractors; suppliers; and other concerned parties shall attend the conference. All participants at the conference shall be familiar with Project and authorized to conclude matters relating to the Work.

2. Agenda: Discuss items of significance that could affect progress, including the following:

   a. Tentative construction schedule.
   b. Phasing.
   c. Critical work sequencing and long-lead items.
   d. Designation of key personnel and their duties.
   e. Procedures for processing field decisions and Change Orders.
   f. Procedures for RFIs.
   g. Procedures for testing and inspecting.
   h. Procedures for processing Applications for Payment.
   i. Distribution of the Contract Documents.
   j. Submittal procedures.
   k. Preparation of Record Documents.
   l. Use of the premises and existing building.
   m. Work restrictions.
   n. Owner's occupancy requirements.
   o. Responsibility for temporary facilities and controls.
   p. Construction waste management and recycling.
   q. Parking availability.
   r. Office, work, and storage areas.
   s. Equipment deliveries and priorities.
   t. First aid.
   u. Security.
   v. Progress cleaning.
   w. Working hours.

3. Minutes: Record and distribute meeting minutes.

C. Progress Meetings: Conduct progress meetings at regular intervals no less than bi-weekly. Coordinate dates of meetings with preparation of payment requests.

1. Attendees: In addition to representatives of Owner and Architect, each contractor, subcontractor, supplier, and other entity concerned with current progress or involved in planning, coordination, or performance of future activities shall be represented at these meetings. All participants at the conference shall be familiar with Project and authorized to conclude matters relating to the Work.

2. Agenda: Review and correct or approve minutes of previous progress meeting. Review other items of significance that could affect progress. Include topics for discussion as appropriate to status of Project.

a. Contractor's Construction Schedule: Review progress since the last meeting. Determine whether each activity is on time, ahead of schedule, or behind schedule, in relation to Contractor's Construction Schedule. Determine how construction behind schedule will be expedited; secure commitments from parties involved to do so. Discuss whether schedule revisions are required to ensure that current and subsequent activities will be completed within the Contract Time.
   1) Review schedule for next period.

b. Review present and future needs of each entity present, including the following:

   1) Interface requirements.
   2) Sequence of operations.
   3) Status of submittals.
   4) Deliveries.
   5) Off-site fabrication.
   6) Access.
   7) Site utilization.
   8) Temporary facilities and controls.
   9) Work hours.
   10) Hazards and risks.
   11) Progress cleaning.
   12) Quality and work standards.
   13) Status of correction of deficient items.
   14) Field observations.
   15) RFIs.
   16) Status of proposal requests.
   17) Pending changes.
   18) Status of Change Orders.
   19) Pending claims and disputes.
   20) Documentation of information for payment requests.

3. Minutes: Record the meeting minutes.

4. Reporting: Distribute minutes of the meeting to each party present and to parties who should have been present.

   a. Schedule Updating: Revise Contractor's Construction Schedule after each progress meeting where revisions to the schedule have been made or recognized. Issue revised schedule concurrently with the report of each meeting.

1.6 REQUESTS FOR INTERPRETATION (RFIs)

A. Procedure: Immediately on discovery of the need for interpretation of the Contract Documents, and if not possible to request interpretation at Project meeting, prepare and submit an RFI in the form specified.

1. RFIs shall originate with Contractor. RFIs submitted by entities other than Contractor will be returned with no response.

2. Coordinate and submit RFIs in a prompt manner so as to avoid delays in Contractor's work or work of subcontractors.

B. Content of the RFI: Include a detailed, legible description of item needing interpretation and the following:

1. Project name.
2. Date.
3. Name of Contractor.
4. Name of Architect and Construction Manager.
5. RFI number, numbered sequentially.
6. Specification Section number and title and related paragraphs, as appropriate.
7. Drawing number and detail references, as appropriate.
8. Field dimensions and conditions, as appropriate.
9. Contractor's suggested solution(s). If Contractor's solution(s) impact the Contract Time or the Contract Sum, Contractor shall state impact in the RFI.
10. Contractor's signature.
11. Attachments: Include drawings, descriptions, measurements, photos, Product Data, Shop Drawings, and other information necessary to fully describe items needing interpretation.

C. Hard-Copy RFIs: City of Fort Lauderdale format.

1. Identify each page of attachments with the RFI number and sequential page number.

D. Architect's Action: Architect will review each RFI, determine action required, and return it. Allow seven working days for Architect's response for each RFI. RFIs received after 1:00 p.m. will be considered as received the following working day.

1. The following RFIs will be returned without action:

   a. Requests for approval of submittals.
   b. Requests for approval of substitutions.
   c. Requests for coordination information already indicated in the Contract Documents.
   d. Requests for adjustments in the Contract Time or the Contract Sum.
   e. Requests for interpretation of Architect's actions on submittals.
   f. Incomplete RFIs or RFIs with numerous errors.

2. Architect's action may include a request for additional information, in which case Architect's time for response will start again.

3. Architect's action on RFIs that may result in a change to the Contract Time or the Contract Sum may be eligible for Contractor to submit Change Proposal according to Division 01 Section "Contract Modification Procedures."

   a. If Contractor believes the RFI response warrants change in the Contract Time or the Contract Sum, notify Architect in writing within 10 days of receipt of the RFI response.

E. On receipt of Architect's action, update the RFI log and immediately distribute the RFI response to affected parties. Review response and notify Architect within seven days if Contractor disagrees with response.

F. RFI Log: Prepare, maintain, and submit a tabular log of RFIs organized by the RFI number. Submit log weekly. Include the following:

1. Project name.
2. Name and address of Contractor.
3. Name and address of Architect.
4. RFI number including RFIs that were dropped and not submitted.
5. RFI description.
6. Date the RFI was submitted.
7. Date Architect's response was received.
8. Identification of related Minor Change in the Work, Construction Change Directive, and Proposal Request, as appropriate.
9. Identification of related Field Order, Work Change Directive, and Proposal Request, as appropriate.

PART 2 - PRODUCTS (Not Used)

PART 3 - EXECUTION (Not Used)

END OF SECTION 013100

SECTION 013200
CONSTRUCTION PROGRESS DOCUMENTATION

PART 1 - GENERAL

1.1 SUMMARY

A. This Section includes administrative and procedural requirements for documenting the progress of construction during performance of the Work, including the following:

1. Contractor's Construction Schedule.
2. Submittals Schedule.
3. Daily construction reports.
4. Field condition reports.

B. See Division 01 Section "Payment Procedures" for submitting the Schedule of Values.

1.2 DEFINITIONS

A. Activity: A discrete part of a project that can be identified for planning, scheduling, monitoring, and controlling the construction project. Activities included in a construction schedule consume time and resources.

1. Critical activities are activities on the critical path. They must start and finish on the planned early start and finish times.
2. Predecessor Activity: An activity that precedes another activity in the network.
3. Successor Activity: An activity that follows another activity in the network.

B. CPM: Critical path method, which is a method of planning and scheduling a construction project where activities are arranged based on activity relationships. Network calculations determine when activities can be performed and the critical path of Project.

C. Critical Path: The longest connected chain of interdependent activities through the network schedule that establishes the minimum overall Project duration and contains no float.

D. Float: The measure of leeway in starting and completing an activity.

1. Float time belongs to Owner.

1.3 SUBMITTALS

A. Submittals Schedule: Submit three copies of schedule. Arrange the following information in a tabular format:

1. Scheduled date for first submittal.
2. Submittal category (action or informational).
3. Description of the Work covered.
4. Scheduled date for Architect's final release or approval.

B. Contractor's Construction Schedule: Submit two opaque copies of initial schedule, large enough to show entire schedule for entire construction period.

C. Daily Construction Reports: Submit two copies at weekly intervals.

D. Field Condition Reports: Submit two copies at time of discovery of differing conditions.

1.4 COORDINATION

A. Coordinate preparation and processing of schedules and reports with performance of construction activities and with scheduling and reporting of separate contractors.

B. Coordinate Contractor's Construction Schedule with the Schedule of Values, list of Submittals Schedule, progress reports, payment requests, and other required schedules and reports.

1. Secure time commitments for performing critical elements of the Work from parties involved.
2. Coordinate each construction activity in the network with other activities and schedule them in proper sequence.

PART 2 - PRODUCTS

2.1 SUBMITTALS SCHEDULE

A. Preparation: Submit a schedule of submittals, arranged in chronological order by dates required by construction schedule. Include time required for review, resubmittal, ordering, manufacturing, fabrication, and delivery when establishing dates.

1. Coordinate Submittals Schedule with list of subcontracts, the Schedule of Values, and Contractor's Construction Schedule.
2. Submit concurrently with the first complete submittal of Contractor's Construction Schedule.

2.2 CONTRACTOR'S CONSTRUCTION SCHEDULE, GENERAL

A. Time Frame: Extend schedule from date established for the Notice to Proceed to date of Final Completion.

1. Contract completion date shall not be changed by submission of a schedule that shows an early completion date, unless specifically authorized by Change Order.
2. Submittal Review Time: Include review and resubmittal times indicated in Division 01 Section "Submittal Procedures" in schedule. Coordinate submittal review times in Contractor's Construction Schedule with Submittals Schedule.
3. Substantial Completion: Indicate completion in advance of date established for Substantial Completion, and allow time for Architect's administrative procedures necessary for certification of Substantial Completion.

B. Contract Modifications: For each proposed contract modification and concurrent with its submission, prepare a time-impact analysis to demonstrate the effect of the proposed change on the overall project schedule.

2.3 CONTRACTOR'S CONSTRUCTION SCHEDULE (CPM SCHEDULE)

A. CPM Schedule Preparation: Prepare a list of all activities required to complete the Work. Using the preliminary network diagram, prepare a skeleton network to identify probable critical paths.

1. Activities: Indicate the estimated time duration, sequence requirements, and relationship of each activity in relation to other activities. Include estimated time frames for the following activities:

   a. Preparation and processing of submittals.
   b. Mobilization and demobilization.
   c. Purchase of materials.
   d. Delivery.
   e. Installation.
   f. Work by Owner that may affect or be affected by Contractor's activities.

2. Critical Path Activities: Identify critical path activities, including those for interim completion dates. Scheduled start and completion dates shall be consistent with Contract milestone dates.

2.4 REPORTS

A. Daily Construction Reports: Prepare a daily construction report recording the following information concerning events at Project site:

1. Equipment at Project site.
2. Material deliveries.
3. High and low temperatures and general weather conditions.
4. Accidents.
5. Stoppages, delays, shortages, and losses.
6. Meter readings and similar recordings.
7. Orders and requests of authorities having jurisdiction.

B. Field Condition Reports: Immediately on discovery of a difference between field conditions and the Contract Documents, prepare and submit a detailed report. Submit with a request for interpretation on CSI Form 13.2A. Include a detailed description of the differing conditions, together with recommendations for changing the Contract Documents.

PART 3 - EXECUTION

3.1 CONTRACTOR'S CONSTRUCTION SCHEDULE

A. Contractor's Construction Schedule Updating: At weekly intervals, update schedule to reflect actual construction progress and activities. Issue schedule one week before each regularly scheduled progress meeting.

1. Revise schedule immediately after each meeting or other activity where revisions have been recognized or made. Issue updated schedule concurrently with the report of each such meeting.

2. Include a report with updated schedule that indicates every change, including, but not limited to, changes in logic, durations, actual starts and finishes, and activity durations.
3. As the Work progresses, indicate Actual Completion percentage for each activity.

B. Distribution: Distribute copies of approved schedule to Architect Owner, separate contractors, testing and inspecting agencies, and other parties identified by Contractor with a need-to-know schedule responsibility.

1. Post copies in Project meeting rooms and temporary field offices.
2. When revisions are made, distribute updated schedules to the same parties and post in the same locations. Delete parties from distribution when they have completed their assigned portion of the Work and are no longer involved in performance of construction activities.

END OF SECTION 013200

SECTION 013300
SUBMITTAL PROCEDURES

PART 1 - GENERAL

1.1 SUMMARY

A. This Section includes administrative and procedural requirements for submitting Shop Drawings, Product Data, Samples, and other submittals.

B. See Division 01 Section "Construction Progress Documentation" for submitting schedules and reports, including Contractor's Construction Schedule.

C. See Division 01 Section "Closeout Procedures" for submitting warranties.

D. See Division 01 Section "Project Record Documents" for submitting Record Drawings, Record Specifications, and Record Product Data.

1.2 DEFINITIONS

A. Action Submittals: Written and graphic information that requires Architect's responsive action.

B. Informational Submittals: Written information that does not require Architect's responsive action. Submittals may be rejected for not complying with requirements.

1.3 SUBMITTAL PROCEDURES

A. Coordination: Coordinate preparation and processing of submittals with performance of construction activities.

1. Coordinate each submittal with fabrication, purchasing, testing, delivery, other submittals, and related activities that require sequential activity.

2. Coordinate transmittal of different types of submittals for related parts of the Work so processing will not be delayed because of need to review submittals concurrently for coordination.

a. Architect reserves the right to withhold action on a submittal requiring coordination with other submittals until related submittals are received.

B. Submittals Schedule: Comply with requirements in Division 01 Section "Construction Progress Documentation" for list of submittals and time requirements for scheduled performance of related construction activities.

C. Processing Time: Allow enough time for submittal review, including time for resubmittals, as follows. Time for review shall commence on Architect's receipt of submittal. No extension of the Contract Time will be authorized because of failure to transmit submittals enough in advance of the Work to permit processing, including resubmittals.

1. Initial Review: Allow 4 days for initial review of each submittal. Allow additional time if coordination with subsequent submittals is required. Architect will advise Contractor when a submittal being processed must be delayed for coordination.

2. Intermediate Review: If intermediate submittal is necessary, process it in same manner as initial submittal.

3. Resubmittal Review: Allow 4 days for review of each resubmittal.

D. Identification: Place a permanent label or title block on each submittal for identification.

1. Indicate name of firm or entity that prepared each submittal on label or title block.

2. Provide a space approximately 6 by 8 inches(150 by 200 mm) on label or beside title block to record Contractor's review and approval markings and action taken by Architect.

3. Include the following information on label for processing and recording action taken:

a. Project name.
b. Date.
c. Name and address of Architect.
d. Name and address of Contractor.
e. Name and address of subcontractor.
f. Name and address of supplier.
g. Name of manufacturer.
h. Submittal number or other unique identifier, including revision identifier.
1) Submittal number shall use Specification Section number followed by a decimal point and then a sequential number (e.g., 06100.01). Resubmittals shall include an alphabetic suffix after another decimal point (e.g., 06100.01.A).
i. Number and title of appropriate Specification Section.
j. Drawing number and detail references, as appropriate.
k. Location(s) where product is to be installed, as appropriate.
l. Other necessary identification.

E. Deviations: Highlight, encircle, or otherwise specifically identify deviations from the Contract Documents on submittals.

F. Additional Copies: Unless additional copies are required for final submittal, and unless Architect observes noncompliance with provisions in the Contract Documents, initial submittal may serve as final submittal.

1. Additional copies submitted for maintenance manuals will not be marked with action taken and will be returned.

G. Transmittal: Package each submittal individually and appropriately for transmittal and handling. Transmit each submittal using a transmittal form. Architect will discard submittals received from sources other than Contractor.

H. Resubmittals: Make resubmittals in same form and number of copies as initial submittal.

1. Note date and content of previous submittal.

2. Note date and content of revision in label or title block and clearly indicate extent of revision.

3. Resubmit submittals until they are marked " approval notation from Architect's action stamp."

I. Distribution: Furnish copies of final submittals to manufacturers, subcontractors, suppliers, fabricators, installers, authorities having jurisdiction, and others as necessary for performance of construction activities. Show distribution on transmittal forms.

J. Use for Construction: Use only final submittals with mark indicating "approval" taken by Architect.

1.4 CONTRACTOR'S USE OF ARCHITECT'S CAD FILES

A. General: At Contractor's written request, copies of Architect's CAD files will be provided to Contractor for Contractor's use in connection with Project, subject to the following conditions:

1. Only with release statement signed by the contractor from the Architect.

PART 2 - PRODUCTS

2.1 ACTION SUBMITTALS

A. General: Prepare and submit Action Submittals required by individual Specification Sections.

B. Product Data: Collect information into a single submittal for each element of construction and type of product or equipment.

1. If information must be specially prepared for submittal because standard printed data are not suitable for use, submit as Shop Drawings, not as Product Data.

2. Mark each copy of each submittal to show which products and options are applicable.

3. Include the following information, as applicable:

a. Manufacturer's written recommendations.
b. Manufacturer's product specifications.
c. Manufacturer's installation instructions.
d. Manufacturer's catalog cuts.
e. Wiring diagrams showing factory-installed wiring.
f. Printed performance curves.
g. Operational range diagrams.
h. Compliance with specified referenced standards.
i. Testing by recognized testing agency.

4. Number of Copies: Submit three copies of Product Data, unless otherwise indicated. Architect will return two copies. Mark up and retain one returned copy as a Project Record Document.

C. Shop Drawings: Prepare Project-specific information, drawn accurately to scale. Do not base Shop Drawings on reproductions of the Contract Documents or standard printed data, unless submittal of Architect's CAD Drawings is otherwise permitted.

1. Preparation: Fully illustrate requirements in the Contract Documents. Include the following information, as applicable:

   a. Dimensions.
   b. Identification of products.
   c. Schedules.
   d. Notation of coordination requirements.
   e. Notation of dimensions established by field measurement.
   f. Relationship to adjoining construction clearly indicated.
   g. Seal and signature of professional engineer if specified.

2. Sheet Size: Except for templates, patterns, and similar full-size drawings, submit Shop Drawings on sheets at least 8-1/2 by 11 inches(215 by 280 mm) but no larger than 30 by 40 inches(750 by 1000 mm).

3. Number of Copies: Submit two opaque (bond) copies of each submittal. Architect will return one copy.

D. Samples: Submit Samples for review of kind, color, pattern, and texture for a check of these characteristics with other elements and for a comparison of these characteristics between submittal and actual component as delivered and installed.

1. Transmit Samples that contain multiple, related components such as accessories together in one submittal package.

2. Identification: Attach label on unexposed side of Samples that includes the following:

   a. Generic description of Sample.
   b. Product name and name of manufacturer.
   c. Sample source.
   d. Number and title of appropriate Specification Section.

3. Disposition: Maintain sets of approved Samples at Project site, available for quality-control comparisons throughout the course of construction activity. Sample sets may be used to determine final acceptance of construction associated with each set.

E. Subcontract List: Prepare a written summary identifying individuals or firms proposed for each portion of the Work, including those who are to furnish products or equipment fabricated to a special design. Use CSI Form 1.5A.

1. Number of Copies: Submit three copies of subcontractor list, unless otherwise indicated. Architect will return 2 copies.

2.2 INFORMATIONAL SUBMITTALS

A. General: Prepare and submit Informational Submittals required by other Specification Sections.

1. Number of Copies: Submit two copies of each submittal, unless otherwise indicated. Architect will not return copies.

2. Certificates and Certifications: Provide a notarized statement that includes signature of entity responsible for preparing certification. Certificates and certifications shall be

signed by an officer or other individual authorized to sign documents on behalf of that entity.

3. Test and Inspection Reports: Comply with requirements specified in Division 01 Section "Quality Requirements."

B. Manufacturer Certificates: Prepare written statements on manufacturer's letterhead certifying that manufacturer complies with requirements in the Contract Documents. Include evidence of manufacturing experience where required.

C. Manufacturer's Field Reports: Prepare written information documenting factory-authorized service representative's tests and inspections. Include the following, as applicable:

1. Statement on condition of substrates and their acceptability for installation of product.

2. Summary of installation procedures being followed, whether they comply with requirements and, if not, what corrective action was taken.

3. Results of operational and other tests and a statement of whether observed performance complies with requirements.

D. Insurance Certificates and Bonds: Prepare written information indicating current status of insurance or bonding coverage. Include name of entity covered by insurance or bond, limits of coverage, amounts of deductibles, if any, and term of the coverage.

PART 3 - EXECUTION

3.1 CONTRACTOR'S REVIEW

A. Review each submittal and check for coordination with other Work of the Contract and for compliance with the Contract Documents. Note corrections and field dimensions. Mark with approval stamp before submitting to Architect.

B. Approval Stamp: Stamp each submittal with a uniform, approval stamp. Include Project name and location, submittal number, Specification Section title and number, name of reviewer, date of Contractor's approval, and statement certifying that submittal has been reviewed, checked, and approved for compliance with the Contract Documents.

3.2 ARCHITECT'S ACTION

A. General: Architect will not review submittals that do not bear Contractor's approval stamp and will return them without action.

B. Action Submittals: Architect will review each submittal, make marks to indicate corrections or modifications required, and return it. Architect will stamp each submittal with an action stamp and will mark stamp appropriately to indicate action taken.

C. Informational Submittals: Architect will review each submittal and will not return it, or will return it if it does not comply with requirements. Architect will forward each submittal to appropriate party.

D. Partial submittals are not acceptable, will be considered nonresponsive, and will be returned without review.

E. Submittals not required by the Contract Documents may not be reviewed and may be discarded.

END OF SECTION 013300

SECTION 015000
TEMPORARY FACILITIES AND UTILITIES

PART 1 - GENERAL

1.1 SUMMARY

A. This Section includes requirements for temporary utilities, support facilities, and security and protection facilities.

1.2 USE CHARGES

A. Water Service: Water from Owner's existing water system is available for use without metering and without payment of use charges. Provide connections and extensions of services as required for construction operations.

B. Electric Power Service: Electric power from Owner's existing system is available for use without metering and without payment of use charges. Provide connections and extensions of services as required for construction operations.

PART 2 - PRODUCTS

2.1 EQUIPMENT

A. Fire Extinguishers: Portable, UL rated; with class and extinguishing agent as required by locations and classes of fire exposures.

PART 3 - EXECUTION

3.1 TEMPORARY UTILITY

A. Water Service: Use of Owner's existing water service facilities will be permitted, as long as facilities are cleaned and maintained in a condition acceptable to Owner. At Substantial Completion, restore these facilities to condition existing before initial use.

1. Where installations below an outlet might be damaged by spillage or leakage, provide a drip pan of suitable size to minimize water damage. Drain accumulated water promptly from pans.

B. Sanitary Facilities: Provide temporary toilets, wash facilities, and drinking water for use of construction personnel. Comply with authorities having jurisdiction for type, number, location, operation, and maintenance of fixtures and facilities.

1. Toilets: Use of Owner's existing toilet facilities will be permitted, as long as facilities are cleaned and maintained in a condition acceptable to Owner. At Substantial Completion, restore these facilities to condition existing before initial use.

C. Electric Power Service: Use of Owner's existing electric power service will be permitted, as long as equipment is maintained in a condition acceptable to Owner.

3.2 SUPPORT FACILITIES INSTALLATION

A. Waste Disposal Facilities: Provide waste-collection containers in sizes adequate to handle waste from construction operations. Comply with requirements of authorities having jurisdiction. Comply with Division 01 Section "Execution" for progress cleaning requirements.

B. Lifts and Hoists: Provide facilities necessary for hoisting materials and personnel.

1. Truck cranes and similar devices used for hoisting materials are considered "tools and equipment" and not temporary facilities.

C. Existing Elevator Use: Use of Owner's existing elevators will be permitted, as long as elevators are cleaned and maintained in a condition acceptable to Owner. At Substantial Completion, restore elevators to condition existing before initial use, including replacing worn cables, guide shoes, and similar items of limited life.

1. Provide protective coverings, barriers, devices, signs, or other procedures to protect elevator car and entrance doors and frame. If, despite such protection, elevators become damaged, engage elevator Installer to restore damaged work so no evidence remains of correction work. Return items that cannot be refinished in field to the shop, make required repairs and refinish entire unit, or provide new units as required.

D. Existing Stair Usage: Use of Owner's existing stairs will be permitted, as long as stairs are cleaned and maintained in a condition acceptable to Owner. At Substantial Completion, restore stairs to condition existing before initial use.

1. Provide protective coverings, barriers, devices, signs, or other procedures to protect stairs and to maintain means of egress. If, despite such protection, stairs become damaged, restore damaged areas so no evidence remains of correction work.

E. Temporary Use of Permanent Stairs: Cover finished, permanent stairs with protective covering of plywood or similar material so finishes will be undamaged at time of acceptance.

3.3 SECURITY AND PROTECTION FACILITIES INSTALLATION

A. Environmental Protection: Provide protection, operate temporary facilities, and conduct construction in ways and by methods that comply with environmental regulations and that minimize possible air, waterway, and subsoil contamination or pollution or other undesirable effects.

B. Storm water Control: Comply with authorities having jurisdiction. Provide barriers in and around excavations and subgrade construction to prevent flooding by runoff of storm water from heavy rains.

C. Security Enclosure and Lockup: Install substantial temporary enclosure around partially completed areas of construction. Provide lockable entrances to prevent unauthorized entrance, vandalism, theft, and similar violations of security.

D. Barricades, Warning Signs, and Lights: Comply with requirements of authorities having jurisdiction for erecting structurally adequate barricades, including warning signs and lighting.

1. Temporary Enclosures: Provide temporary enclosures for protection of construction, in progress and completed, from exposure, foul weather, other construction operations, and similar activities.

E. Temporary Fire Protection: Install and maintain temporary fire-protection facilities of types needed to protect against reasonably predictable and controllable fire losses. Comply with NFPA 241.

1. Prohibit smoking in construction areas.
2. Supervise welding operations, combustion-type temporary heating units, and similar sources of fire ignition according to requirements of authorities having jurisdiction.
3. Develop and supervise an overall fire-prevention and -protection program for personnel at Project site. Review needs with local fire department and establish procedures to be followed. Instruct personnel in methods and procedures. Post warnings and information.

END OF SECTION 015000

SECTION 016000
PRODUCT REQUIREMENTS

PART 1 - GENERAL

1.1 SUMMARY

A. This Section includes administrative and procedural requirements for selection of products for use in Project; product delivery, storage, and handling; manufacturers' standard warranties on products; special warranties; product substitutions; and comparable products.

B. See Division 01 Section "Closeout Procedures" for submitting warranties for Contract closeout.

C. See Divisions 02 through 07 Sections for specific requirements for warranties on products and installations specified to be warranted.

D. The installation shall conform to FBC (latest edition) RAS, TAS standards for high wind velocity hurricane zones. Contractor shall secure all permitting and inspections.

1.2 DEFINITIONS

A. Products: Items purchased for incorporating into the Work, whether purchased for Project or taken from previously purchased stock. The term "product" includes the terms "material," "equipment," "system," and terms of similar intent.

1. Named Products: Items identified by manufacturer's product name, including make or model number or other designation shown or listed in manufacturer's published product literature, that is current as of date of the Contract Documents.
2. New Products: Items that have not previously been incorporated into another project or facility, except that products consisting of recycled-content materials are allowed, unless explicitly stated otherwise. Products salvaged or recycled from other projects are not considered new products.
3. Comparable Product: Product that is demonstrated and approved through submittal process, or where indicated as a product substitution, to have the indicated qualities related to type, function, dimension, in-service performance, physical properties, appearance, and other characteristics that equal or exceed those of specified product.

B. Substitutions: Changes in products, materials, equipment, and methods of construction from those required by the Contract Documents and proposed by Contractor.

C. Basis-of-Design Product Specification: Where a specific manufacturer's product is named and accompanied by the words "basis of design," including make or model number or other designation, to establish the significant qualities related to type, function, dimension, in-service performance, physical properties, appearance, and other characteristics for purposes of evaluating comparable products of other named manufacturers.

1.3 SUBMITTALS

A. Substitution Requests: Submit three copies of each request for consideration. Identify product or fabrication or installation method to be replaced. Include Specification Section number and title and Drawing numbers and titles.

1. Substitution Request Form: Use form provided by Owner.
2. Documentation: Show compliance with requirements for substitutions and the following, as applicable:

   a. Statement indicating why specified material or product cannot be provided.
   b. Coordination information, including a list of changes or modifications needed to other parts of the Work and to construction performed by Owner and separate contractors, that will be necessary to accommodate proposed substitution.
   c. Detailed comparison of significant qualities of proposed substitution with those of the Work specified. Significant qualities may include attributes such as performance, weight, size, durability, visual effect, and specific features and requirements indicated.
   d. Product Data, including drawings and descriptions of products and fabrication and installation procedures.
   e. Samples, where applicable or requested.
   f. List of similar installations for completed projects with project names and addresses and names and addresses of architects and owners.
   g. Material test reports from a qualified testing agency indicating and interpreting test results for compliance with requirements indicated.
   h. Research/evaluation reports evidencing compliance with building code in effect for Project, from a model code organization acceptable to authorities having jurisdiction.
   i. Detailed comparison of Contractor's Construction Schedule using proposed substitution with products specified for the Work, including effect on the overall Contract Time. If specified product or method of construction cannot be provided within the Contract Time, include letter from manufacturer, on manufacturer's letterhead, stating lack of availability or delays in delivery.
   j. Cost information, including a proposal of change, if any, in the Contract Sum.
   k. Contractor's certification that proposed substitution complies with requirements in the Contract Documents and is appropriate for applications indicated.
   l. Contractor's waiver of rights to additional payment or time that may subsequently become necessary because of failure of proposed substitution to produce indicated results.

3. Architect's Action: If necessary, Architect will request additional information or documentation for evaluation within 7 days of receipt of a request for substitution. Architect will notify Contractor of acceptance or rejection of proposed substitution within 15 days of receipt of request, or 7 days of receipt of additional information or documentation, whichever is later.

   a. Form of Acceptance: Change Order.
   b. Use product specified if Architect cannot make a decision on use of a proposed substitution within time allocated.

B. Comparable Product Requests: Submit three copies of each request for consideration. Identify product or fabrication or installation method to be replaced. Include Specification Section number and title and Drawing numbers and titles.

1. Architect's Action: If necessary, Architect will request additional information or documentation for evaluation within one week of receipt of a comparable product request. Architect will notify Contractor of approval or rejection of proposed comparable product request within 15 days of receipt of request, or 7 days of receipt of additional information or documentation, whichever is later.

    a. Form of Approval: As specified in Division 01 Section "Submittal Procedures."
    b. Use product specified if Architect cannot make a decision on use of a comparable product request within time allocated.

C. Basis-of-Design Product Specification Submittal: Comply with requirements in Division 01 Section "Submittal Procedures." Show compliance with requirements.

1.4 QUALITY ASSURANCE

A. Compatibility of Options: If Contractor is given option of selecting between two or more products for use on Project, product selected shall be compatible with products previously selected, even if previously selected products were also options.

1.5 PRODUCT DELIVERY, STORAGE, AND HANDLING

A. Deliver, store, and handle products using means and methods that will prevent damage, deterioration, and loss, including theft. Comply with manufacturer's written instructions.

B. Delivery and Handling:

1. Schedule delivery to minimize long-term storage at Project site and to prevent overcrowding of construction spaces.
2. Coordinate delivery with installation time to ensure minimum holding time for items that are flammable, hazardous, easily damaged, or sensitive to deterioration, theft, and other losses.
3. Deliver products to Project site in an undamaged condition in manufacturer's original sealed container or other packaging system, complete with labels and instructions for handling, storing, unpacking, protecting, and installing.
4. Inspect products on delivery to ensure compliance with the Contract Documents and to ensure that products are undamaged and properly protected.

C. Storage:

1. Store products to allow for inspection and measurement of quantity or counting of units.
2. Store materials in a manner that will not endanger Project structure.
3. Store products that are subject to damage by the elements, under cover in a weather tight enclosure above ground, with ventilation adequate to prevent condensation.
4. Store cementitious products and materials on elevated platforms.
5. Store foam plastic from exposure to sunlight, except to extent necessary for period of installation and concealment.
6. Comply with product manufacturer's written instructions for temperature, humidity, ventilation, and weather-protection requirements for storage.
7. Protect stored products from damage and liquids from freezing.

1.6 PRODUCT WARRANTIES

A. Warranties specified in other Sections shall be in addition to, and run concurrent with, other warranties required by the Contract Documents. Manufacturer's disclaimers and limitations on product warranties do not relieve Contractor of obligations under requirements of the Contract Documents.

1. Manufacturer's Warranty: Preprinted written warranty published by individual manufacturer for a particular product and specifically endorsed by manufacturer to Owner.
2. Special Warranty: Written warranty required by or incorporated into the Contract Documents, either to extend time limit provided by manufacturer's warranty or to provide more rights for Owner.

B. Special Warranties: Prepare a written document that contains appropriate terms and identification, ready for execution. Submit a draft for approval before final execution.

1. Manufacturer's Standard Form: Modified to include Project-specific information and properly executed.
2. Specified Form: When specified forms are included with the Specifications, prepare a written document using appropriate form properly executed.
3. Refer to Divisions 2 through 16 Sections for specific content requirements and particular requirements for submitting special warranties.

C. Submittal Time: Comply with requirements in Division 01 Section "Closeout Procedures."

PART 2 - PRODUCTS

2.1 PRODUCT SUBSTITUTIONS

A. Timing: Architect will consider requests for substitution if received within 6 days after the Notice of Award. Requests received after that time may be considered or rejected at discretion of Architect.

B. Conditions: Architect will consider Contractor's request for substitution when the following conditions are satisfied. If the following conditions are not satisfied, Architect will return requests without action, except to record noncompliance with these requirements:

1. Requested substitution offers Owner a substantial advantage in cost, time, energy conservation, or other considerations, after deducting additional responsibilities Owner must assume. Contractor’s additional responsibilities may include compensation to City of Fort Lauderdale for redesign and evaluation services, increased cost of other construction by Owner, and similar considerations.
2. Requested substitution does not require extensive revisions to the Contract Documents.
3. Requested substitution is consistent with the Contract Documents and will produce indicated results.
4. Substitution request is fully documented and properly submitted.
5. Requested substitution will not adversely affect Contractor's Construction Schedule.

6. Requested substitution has received necessary approvals of authorities having jurisdiction.
7. Requested substitution is compatible with other portions of the Work.
8. Requested substitution has been coordinated with other portions of the Work.
9. Requested substitution provides specified warranty.

2.2 COMPARABLE PRODUCTS

A. Conditions: Architect will consider Contractor's request for comparable product when the following conditions are satisfied. If the following conditions are not satisfied, Architect will return requests without action, except to record noncompliance with these requirements:

1. Evidence that the proposed product does not require extensive revisions to the Contract Documents, that it is consistent with the Contract Documents and will produce the indicated results, and that it is compatible with other portions of the Work.
2. Detailed comparison of significant qualities of proposed product with those named in the Specifications. Significant qualities include attributes such as performance, weight, size, durability, visual effect, and specific features and requirements indicated.
3. List of similar installations for completed projects with project names and addresses and names and addresses of architects and owners, if requested.
4. Samples, if requested.

PART 3 - EXECUTION (Not Used)

END OF SECTION 016000

SECTION 017700
CLOSEOUT PROCEDURES AND SUBMITTALS

PART 1 - GENERAL

1.1 SUMMARY

A. This Section includes administrative and procedural requirements for contract closeout, including, but not limited to, the following:

1. Inspection procedures.
2. Warranties.
3. Final cleaning.

B. See Division 01 Section "Payment Procedures" for requirements for Applications for Payment for Substantial and Final Completion.

C. See Division 01 Section "Project Record Documents" for submitting Record Drawings, Record Specifications, and Record Product Data.

D. See Divisions 02 through 07 Sections for specific closeout and special cleaning requirements for the Work in those Sections.

1.2 SUBSTANTIAL COMPLETION

A. Preliminary Procedures: Before requesting inspection for determining date of Substantial Completion, complete the following. List items below that are incomplete in request.

1. Prepare a list of items to be completed and corrected (punch list), the value of items on the list, and reasons why the Work is not complete.
2. Advise Owner of pending insurance changeover requirements.
3. Submit specific warranties, workmanship bonds, maintenance service agreements, final certifications, and similar documents.
4. Obtain and submit releases permitting Owner unrestricted use of the Work and access to services and utilities.
5. Prepare and submit Project Record Documents, maintenance manuals, and similar final record information.
6. Deliver tools, spare parts, extra materials, and similar items to location designated by Owner. Label with manufacturer's name and model number where applicable.
7. Terminate and remove temporary facilities from Project site, along with mockups, construction tools, and similar elements.
8. Complete final cleaning requirements, including touchup painting.
9. Touch up and otherwise repair and restore marred exposed finishes to eliminate visual defects.

B. Inspection: Submit a written request for inspection for Substantial Completion. On receipt of request, Architect will either proceed with inspection or notify Contractor of unfulfilled requirements. Architect will prepare the Certificate of Substantial Completion after inspection or will notify Contractor of items, either on Contractor's list or additional items identified by Architect, that must be completed or corrected before certificate will be issued.

1. Reinspection: Request reinspection when the Work identified in previous inspections as incomplete is completed or corrected.
2. Results of completed inspection will form the basis of requirements for Final Completion.

1.3 FINAL COMPLETION

A. Preliminary Procedures: Before requesting final inspection for determining date of Final Completion, complete the following: Revise five subparagraphs below to match the Supplementary Conditions.

1. Submit a final Application for Payment according to Division 01 Section "Payment Procedures."
2. Submit certified copy of Architect's Substantial Completion inspection list of items to be completed or corrected (punch list), endorsed and dated by Architect. The certified copy of the list shall state that each item has been completed or otherwise resolved for acceptance.
3. Submit evidence of final, continuing insurance coverage complying with insurance requirements.
4. Instruct Owner's personnel in operation, adjustment, and maintenance of products, equipment, and systems.

B. Inspection: Submit a written request for final inspection for acceptance. On receipt of request, Architect will either proceed with inspection or notify Contractor of unfulfilled requirements. Architect will prepare a final Certificate for Payment after inspection or will notify Contractor of construction that must be completed or corrected before certificate will be issued.

1. Reinspection: Request reinspection when the Work identified in previous inspections as incomplete is completed or corrected.

1.4 LIST OF INCOMPLETE ITEMS (PUNCH LIST)

A. Preparation: Submit three copies of list. Include name and identification of each space and area affected by construction operations for incomplete items and items needing correction including, if necessary, areas disturbed by Contractor that are outside the limits of construction.

1.5 WARRANTIES

A. Submittal Time: Submit written warranties on request of Architect.

B. Organize warranty documents into an orderly sequence based on the table of contents of the Project Manual.

1. Bind warranties and bonds in heavy-duty, 3-ring, vinyl-covered, loose-leaf binders, thickness as necessary to accommodate contents, and sized to receive 8-1/2-by-11-inch (215-by-280-mm) paper.

2. Provide heavy paper dividers with plastic-covered tabs for each separate warranty. Mark tab to identify the product or installation. Provide a typed description of the product or installation, including the name of the product and the name, address, and telephone number of Installer.
3. Identify each binder on the front and spine with the typed or printed title "WARRANTIES," Project name, and name of Contractor.

C. Provide additional copies of each warranty to include in operation and maintenance manuals.

PART 2 - PRODUCTS (NOT USED)

PART 3 - EXECUTION

3.1 FINAL CLEANING

A. General: Provide final cleaning. Conduct cleaning and waste-removal operations to comply with local laws and ordinances and Federal and local environmental and antipollution regulations.

B. Cleaning: Employ experienced workers or professional cleaners for final cleaning. Clean each surface or unit to condition expected in an average commercial building cleaning and maintenance program. Comply with manufacturer's written instructions.

1. Complete the following cleaning operations before requesting inspection for certification of Substantial Completion for entire Project or for a portion of Project:

   a. Clean Project site, yard, and grounds, in areas disturbed by construction activities, including landscape development areas, of rubbish, waste material, litter, and other foreign substances.
   b. Sweep areas broom clean. Remove petrochemical spills, stains, and other foreign deposits.
   c. Remove tools, construction equipment, machinery, and surplus material from Project site.
   d. Clean exposed exterior and interior hard-surfaced finishes to a dirt-free condition, free of stains, films, and similar foreign substances. Avoid disturbing natural weathering of exterior surfaces. Restore reflective surfaces to their original condition.
   e. Remove debris and surface dust from limited access spaces, including roofs, and similar spaces.
   f. Touch up and otherwise repair and restore marred, exposed finishes and surfaces. Replace finishes and surfaces that cannot be satisfactorily repaired or restored or that already show evidence of repair or restoration.
      1) Do not paint over "UL" and similar labels, including mechanical and electrical nameplates.
   g. Wipe surfaces of mechanical and electrical equipment and similar equipment.
   h. Leave Project clean and ready for occupancy.

C. Comply with safety standards for cleaning. Do not burn waste materials. Do not bury debris or excess materials on Owner's property. Do not discharge volatile, harmful, or dangerous materials into drainage systems. Remove waste materials from Project site and dispose of lawfully.

END OF SECTION 017700

SECTION 024119
SELECTIVE DEMOLITION

PART 1 - GENERAL

1.1 SUMMARY

A. This Section includes the following:

1. Demolition and removal of selected portions of building or structure.
2. Demolition and removal of selected site elements.
3. Salvage of existing items to be reused or recycled.

B. See Division 01 Section "Construction Waste Management and Disposal" for disposal of demolished materials.

1.2 DEFINITIONS

A. Remove: Detach items from existing construction and legally dispose of them off-site, unless indicated to be removed and salvaged or removed and reinstalled.

B. Existing to Remain: Existing items of construction that are not to be removed and that are not otherwise indicated to be removed, removed and salvaged, or removed and reinstalled.

1.3 SUBMITTALS

A. Schedule of Selective Demolition Activities: Indicate detailed sequence of selective demolition and removal work, with starting and ending dates for each activity, interruption of utility services, use of elevator and stairs, and locations of temporary partitions and means of egress.

B. Predemolition Photographs: Show existing conditions of adjoining construction and site improvements, including finish surfaces that might be misconstrued as damage caused by selective demolition operations.

C. Landfill Records: Indicate receipt and acceptance of hazardous wastes by a landfill facility licensed to accept hazardous wastes.

1. Comply with submittal requirements in Division 01 Section "Construction Waste Management and Disposal."

1.4 QUALITY ASSURANCE

A. Demolition Firm Qualifications: An experienced firm that has specialized in demolition work similar in material and extent to that indicated for this Project.

B. Regulatory Requirements: Comply with governing EPA notification regulations before beginning selective demolition. Comply with hauling and disposal regulations of authorities having jurisdiction.

C. Standards: Comply with ANSI A10.6 and NFPA 241.

D. Predemolition Conference: Conduct conference at Project site.

1.5 PROJECT CONDITIONS

A. Owner will occupy portions of building immediately adjacent to selective demolition area. Conduct selective demolition so Owner's operations will not be disrupted.

B. Conditions existing at time of inspection for bidding purpose will be maintained by Owner as far as practical.

C. Notify Architect of discrepancies between existing conditions and Drawings before proceeding with selective demolition.

D. Hazardous Materials: Hazardous materials may be present at certain locations in construction to be selectively demolished. A report on the presence of hazardous materials is on file for review and use for each project containing such materials. Examine report to become aware of locations where hazardous materials are present.

1. Hazardous material remediation is specified elsewhere in the Contract Documents.
2. Do not disturb hazardous materials or items suspected of containing hazardous materials except under procedures specified elsewhere in the Contract Documents.

E. Storage or sale of removed items or materials on-site is not permitted.

F. Utility Service: Maintain existing utilities indicated to remain in service and protect them against damage during selective demolition operations.

1. Maintain fire-protection facilities in service during selective demolition operations.

1.6 WARRANTY

A. Existing Warranties: Remove, replace, patch, and repair materials and surfaces cut or damaged during selective demolition, by methods and with materials so as not to void existing warranties.

PART 2 - PRODUCTS (Not Used)

PART 3 - EXECUTION

3.1 EXAMINATION

A. Survey existing conditions and correlate with requirements indicated to determine extent of selective demolition required.

B. Inventory and record the condition of items to be removed and reinstalled and items to be removed and salvaged.

C. When unanticipated mechanical, electrical, or structural elements that conflict with intended function or design are encountered, investigate and measure the nature and extent of conflict. Promptly submit a written report to Architect.

D. Engage a professional engineer to survey condition of building to determine whether removing any element might result in structural deficiency or unplanned collapse of any portion of structure or adjacent structures during selective demolition operations.

E. Survey of Existing Conditions: Record existing conditions by use of preconstruction photographs.

3.2 UTILITY SERVICES AND MECHANICAL/ELECTRICAL SYSTEMS

A. Existing Services/Systems: Maintain services/systems indicated to remain and protect them against damage during selective demolition operations.

3.3 PREPARATION

A. Site Access and Temporary Controls: Conduct selective demolition and debris-removal operations to ensure minimum interference with roads, streets, walks, walkways, and other adjacent occupied and used facilities.

1. Comply with requirements for access and protection specified in Division 01 Section "Temporary Facilities and Controls."

B. Temporary Facilities: Provide temporary barricades and other protection required to prevent injury to people and damage to adjacent buildings and facilities to remain.

3.4 SELECTIVE DEMOLITION

A. General: Demolish and remove existing construction only to the extent required by new construction and as indicated. Use methods required to complete the Work within limitations of governing regulations and as follows:

1. Neatly cut openings and holes plumb, square, and true to dimensions required. Use cutting methods least likely to damage construction to remain or adjoining construction. Use hand tools or small power tools designed for sawing or grinding, not hammering and chopping, to minimize disturbance of adjacent surfaces. Temporarily cover openings to remain.
2. Cut or drill from the exposed or finished side into concealed surfaces to avoid marring existing finished surfaces.
3. Do not use cutting torches until work area is cleared of flammable materials. At concealed spaces, such as duct and pipe interiors, verify condition and contents of hidden space before starting flame-cutting operations. Maintain fire watch and portable fire-suppression devices during flame-cutting operations.
4. Locate selective demolition equipment and remove debris and materials so as not to impose excessive loads on supporting walls, floors, or framing.
5. Dispose of demolished items and materials promptly. Comply with requirements in Division 01 Section "Construction Waste Management and Disposal."

B. Existing Items to Remain: Protect construction indicated to remain against damage and soiling during selective demolition. When permitted by Architect, items may be removed to a

suitable, protected storage location during selective demolition and cleaned and reinstalled in their original locations after selective demolition operations are complete.

3.5 DISPOSAL OF DEMOLISHED MATERIALS

General: Except for items or materials indicated to be recycled, reused, salvaged, reinstalled, or otherwise indicated to remain Owner's property, remove demolished materials from

A. Project site and legally dispose of them in an EPA-approved landfill.

1. Comply with requirements specified in Division 01 Section "Construction Waste Management and Disposal."

B. Burning: Do not burn demolished materials.

C. Disposal: Transport demolished materials off Owner's property and legally dispose of them.

3.6 CLEANING

A. Clean adjacent structures and improvements of dust, dirt, and debris caused by selective demolition operations. Return adjacent areas to condition existing before selective demolition operations began.

END OF SECTION 024119

SECTION 028200
ASBESTOS REMEDIATON

PART 1 - GENERAL

1.1 SUMMARY

A. This Section includes the following:

1. Demolition and removal of selected portions of building or structure as identified in the asbestos reports concerning some city buildings. Some existing roofing to be removed contain asbestos as indicated in the reports.

1.2 DEFINITIONS

A. Remove: Detach items from existing construction and legally dispose of them off-site.

B. Division 2 Selective Structure Demolition.

C. Existing to Remain: Existing items of construction that are not to be removed and that are not otherwise indicated to be removed, removed and salvaged, or removed and reinstalled.

1.3 SUBMITTALS

A. Schedule of Selective Demolition Activities: Indicate detailed sequence of selective demolition and removal work, with starting and ending dates for each activity, interruption of utility services, use of elevator and stairs, and locations of temporary partitions and means of egress.

B. Predemolition Photographs: Show existing conditions of adjoining construction and site improvements, including finish surfaces, that might be misconstrued as damage caused by selective demolition operations.

C. Landfill Records: Indicate receipt and acceptance of hazardous wastes by a landfill facility licensed to accept hazardous wastes.

1. Comply with submittal requirements in Division 01 Section "Construction Waste Management and Disposal."

1.4 QUALITY ASSURANCE

A. Demolition Firm Qualifications: An experienced firm that has specialized in demolition work similar in asbestos containing material and extent to that indicated for this Project.

B. Regulatory Requirements: Comply with governing EPA notification regulations before beginning selective demolition. Comply with hauling and disposal regulations of authorities having jurisdiction.

C. Standards: Comply with ANSI A10.6 and NFPA 241.

D. Predemolition Conference: Conduct conference at Project site.

1.5 PROJECT CONDITIONS

A. Owner will occupy portions of building immediately adjacent to selective demolition area. Conduct selective demolition so Owner's operations will not be disrupted.

B. Notify Architect of discrepancies between existing conditions and Drawings before proceeding with selective demolition.

1. If additional areas suspected of containing hazardous materials are encountered, do not disturb; immediately notify Architect. City of Fort Lauderdale will verify hazardous materials and modify contract as appropriate to cover additional work.

C. Hazardous Materials: Hazardous materials are present in some construction sites to be selectively demolished. A report on the presence of hazardous materials is on file for review and use. Examine report to become aware of locations where hazardous materials are present.

1. Do not disturb hazardous materials or items suspected of containing hazardous materials except under procedures specified elsewhere in the Contract Documents.

1.6 WARRANTY

A. Existing Warranties: Remove, replace, patch, and repair materials and surfaces cut or damaged during selective demolition, by methods and with materials so as not to void existing warranties.

PART 2 - EXECUTION

2.1 EXAMINATION

A. Survey existing conditions and correlate with requirements indicated to determine extent of selective demolition required.

B. Survey of Existing Conditions: Record existing conditions by use of preconstruction photographs.

1. Comply with requirements specified in Division 01 Section "Construction Progress Documentation."

C. Existing Services/Systems: Maintain services/systems indicated to remain and protect them against damage during selective demolition operations.

2.2 PREPARATION

A. Site Access and Temporary Controls: Conduct selective demolition and debris-removal operations to ensure minimum interference with roads, streets, walks, walkways, and other adjacent occupied and used facilities. Comply with requirements for access and protection specified in Division 01 Section "Temporary Facilities and Controls."

B. Temporary Facilities: Provide temporary barricades and other protection required to prevent injury to people and damage to adjacent buildings and facilities to remain.

1. Dispose of demolished items and materials promptly. Clean salvaged items.

C. Existing Items to Remain: Protect construction indicated to remain against damage and soiling during selective demolition. When permitted by Architect, items may be removed to a suitable, protected storage location during selective demolition and cleaned and reinstalled in their original locations after selective demolition operations are complete.

2.3 DISPOSAL OF DEMOLISHED MATERIALS

A. General: remove demolished materials from Project site and legally dispose of them in an EPA-approved landfill.

1. Comply with requirements specified in Division 01 Section "Construction Waste Management and Disposal."

B. Disposal: Transport demolished materials off Owner's property and legally dispose of them.

2.4 CLEANING

A. Clean adjacent structures and improvements of dust, dirt, and debris caused by selective demolition operations. Return adjacent areas to condition existing before selective demolition operations began.

END OF SECTION 028200

SECTION 073113
ASPHALT SHINGLES

PART 1 - GENERAL

1.1 SUMMARY

A. This Section includes the following, to match the existing pattern and colors where indicated to be a repair or patch situation:
   1. Asphalt shingles.
   2. Felt underlayment.
   3. Self-adhering sheet underlayment.
   4. Ridge vents.

1.2 SUBMITTALS

A. Product Data: For each product indicated.

B. Samples: For asphalt shingles, ridge and hip cap shingles, and ridge vent.

C. Product test reports.

D. Research/evaluation reports.

1.3 QUALITY ASSURANCE

A. Source Limitations: Obtain ridge and hip cap shingles ridge vents felt underlayment and self-adhering sheet underlayment through one source from a single asphalt shingle manufacturer.

B. Fire-Test-Response Characteristics: Provide asphalt shingle and related roofing materials with the fire-test-response characteristics indicated, as determined by testing identical products per test method below by UL or another testing and inspecting agency acceptable to authorities having jurisdiction. Identify materials with appropriate markings of applicable testing and inspecting agency.

   1. Exterior Fire-Test Exposure: Class A; ASTM E 108 or UL 790, for application and roof slopes indicated.

C. Preinstallation Conference: Conduct conference at place to be determined.

D. The installation shall conform to FBC (latest edition) RAS, TAS standards for high wind velocity hurricane zones. Contractor shall secure all permitting and inspections.

1.4 WARRANTY

A. Warranty: Manufacturer's standard form in which manufacturer agrees to repair or replace asphalt shingles that fail in materials within specified warranty period.

   1. Material Warranty Period: 30 years from date of Substantial Completion, prorated, with first 5 years nonprorated.
   2. Algae-Discoloration Warranty Period: Asphalt shingles will not discolor 10 years from date of Substantial Completion.

PART 2 - PRODUCTS

2.1 MANUFACTURERS

A. In other Part 2 articles where titles below introduce lists, the following requirements apply to product selection:

1. Available Products: Subject to compliance with requirements, products that may be incorporated into the Work include, but are not limited to, products specified.
2. Products: Subject to compliance with requirements, provide one of the products specified.

2.2 GLASS-FIBER-REINFORCED ASPHALT SHINGLES

A. Laminated-Strip Asphalt Shingles: ASTM D 3462, laminated, multi-ply overlay construction, glass-fiber reinforced, mineral-granule surfaced, and self-sealing.

1. Available Products:

a. Atlas Roofing Corporation;
b. Celotex Corporation;
c. CertainTeed Corporation;
d. Elk Corporation of Dallas;
e. EMCO Limited, Building Products Division;
f. GAF Materials Corporation;
g. Georgia-Pacific Corporation;
h. Globe Building Materials, Inc.;
i. IKO;
j. Malarkey Roofing Company;
k. Owens Corning;
l. PABCO Roofing Products;
m. TAMKO Roofing Products, Inc.;

B. Multitab-Strip Asphalt Shingles: ASTM D 3462, glass-fiber reinforced, mineral-granule surfaced, and self-sealing.

1. Available Products:

a. Atlas Roofing Corporation;
b. CertainTeed Corporation;
c. GAF Materials Corporation;
d. Georgia-Pacific Corporation;
e. Globe Building Materials, Inc.;
f. IKO;
g. Malarkey Roofing Company;
h. Owens Corning;
i. PABCO Roofing Products;
j. TAMKO Roofing Products, Inc.;

2. Tab Arrangement: Four tab, regularly spaced or as indicated through existing conditions to be verified.

C. Hip and Ridge Shingles: Manufacturer's standard units to match asphalt shingles or Site-fabricated units cut from asphalt shingle strips. Trim each side of lapped portion of unit to taper approximately 1 inch(25 mm).

2.3 UNDERLAYMENT MATERIALS

A. Felts: ASTM D 226 or ASTM D 4869, Type I, asphalt-saturated organic felts, nonperforated.

B. Self-Adhering Sheet Underlayment, Granular Surfaced: ASTM D 1970, minimum of 55-mil-(1.4-mm-) thick sheet; glass-fiber-mat-reinforced, SBS-modified asphalt; mineral-granule surfaced; with release paper backing; cold applied.

C. Self-Adhering Sheet Underlayment, Polyethylene Faced: ASTM D 1970, minimum of 40-mil-(1.0- mm-) thick, slip-resisting, polyethylene-film-reinforced top surface laminated to SBS-modified asphalt adhesive, with release paper backing; cold applied.

2.4 RIDGE VENTS

A. Rigid Ridge Vent: Manufacturer's standard rigid section high-density polypropylene or other UV-stabilized plastic ridge vent with nonwoven geotextile filter strips and with external deflector baffles; for use under ridge shingles.

1. Available Products:

a. Air Vent Inc., a CertainTeed Company; ShingleVent II.
b. Cor-A-Vent, Inc.; V-Series.
c. GAF Materials Corporation; Cobra Rigid Vent II.
d. Globe Building Materials, Inc.; SmartAir Ridge Vent.
e. Lomanco, Inc.; OR-4.
f. Mid-America Building Products; RidgeMaster Plus.
g. Obdyke, Benjamin Incorporated; Xtractor Vent X18.
h. Owens Corning; VentSure Ridge Vent.
i. Ridglass Manufacturing Company, Inc.; Coolvent.
j. Solar Group, Inc. (The), a Gibraltar Company; PRV4.
k. Trimline Building Products; Trimline Ridge Vent.

2.5 ACCESSORIES

A. Asphalt Roofing Cement: ASTM D 4586, Type II, asbestos free.

B. Roofing Nails: To conform to FBC RAS 115 standards.

1. Where nails are in contact with metal flashing, use nails made from same metal as flashing.

C. Felt Underlayment Nails: Aluminum, stainless-steel, or hot-dip galvanized steel wire with low profile capped heads or disc caps.

2.6 METAL FLASHING AND TRIM

A. Sheet Metal Flashing and Trim: Comply with requirements in Division 07 Section "Sheet Metal Flashing and Trim."

1. Sheet Metal: Stainless steel Zinc-tin alloy-coated stainless steel, Zinc-coated (galvanized) steel.

B. Fabricate sheet metal flashing and trim to comply with recommendations in SMACNA's "Architectural Sheet Metal Manual" that apply to design, dimensions, metal, and other characteristics of item.

PART 3 - EXECUTION

3.1 UNDERLAYMENT INSTALLATION

A. Single-Layer Felt Underlayment: Install single layer of felt underlayment on roof deck perpendicular to roof slope in parallel courses. Lap sides a minimum of 2 inches(50 mm) over underlying course. Lap ends a minimum of 4 inches(100 mm). Stagger end laps between succeeding courses at least 72 inches(1830 mm). Fasten with Tin Tag perFBC TAS and RAS requirements.

1. Install felt underlayment on roof deck not covered by self-adhering sheet underlayment. Lap sides of felt over self-adhering sheet underlayment not less than 3 inches(75 mm) in direction to shed water. Lap ends of felt not less than 6 inches(150 mm) over self-adhering sheet underlayment.

B. Double-Layer Felt Underlayment: Install double layers of felt underlayment on roof deck perpendicular to roof slope in parallel courses. Install a 19-inch-(485-mm-) wide starter course at eaves and completely cover with full-width second course. Install succeeding courses lapping previous courses 19 inches(485 mm) in shingle fashion. Lap ends a minimum of 6 inches(150 mm). Stagger end laps between succeeding courses at least 72 inches(1830 mm). Fasten with felt underlayment tin tags as approved by code authority and Architect.

1. Install felt underlayment on roof sheathing not covered by self-adhering sheet underlayment. Lap edges over self-adhering sheet underlayment not less than 3 inches(75 mm) in direction to shed water.

C. Self-Adhering Sheet Underlayment: Install self-adhering sheet underlayment, wrinkle free, on roof deck. Comply with low-temperature installation restrictions of underlayment manufacturer if applicable. Install at locations indicated, lapped in direction to shed water. Lap sides not less than 3-1/2 inches(89 mm). Lap ends not less than 6 inches(150 mm) staggered 24 inches(600 mm) between courses. Roll laps with roller. Cover underlayment within seven days.

3.2 METAL FLASHING INSTALLATION

A. General: Install metal flashings and other sheet metal to comply with requirements in FBC (latest edition) RAS and TAS "Sheet Metal Flashing and Trim " .

1. Install metal flashings according to recommendations in ARMA's "Residential Asphalt Roofing Manual" and asphalt shingle recommendations in NRCA's "The NRCA Roofing and Waterproofing Manual."

3.3 ASPHALT SHINGLE INSTALLATION

A. Install asphalt shingles according to manufacturer's written instructions, recommendations in ARMA's "Residential Asphalt Roofing Manual," and asphalt shingle recommendations in NRCA's "The NRCA Roofing and Waterproofing Manual." “FBC’s RAS, TAS requirements.

B. Install starter strip along lowest roof edge, consisting of an asphalt shingle strip at least 7 inches(175 mm) wide with self-sealing strip face up at roof edge.

1. Extend asphalt shingles 1/2 inch(13 mm) over fascia at eaves and rakes.

C. Install first and remaining courses of asphalt shingles stair-stepping diagonally across roof deck with manufacturer's recommended offset pattern at succeeding courses, maintaining uniform exposure.

D. Fasten asphalt shingle strips with a minimum of six roofing nails located according to manufacturer's written instructions to maintain code hurricane requirement.

E. Woven Valleys: Extend succeeding asphalt shingle courses from both sides of valley 12 inches(300 mm) beyond center of valley, weaving intersecting shingle-strip courses over each other. Use one-piece shingle strips without joints in the valley.

F. Closed-Cut Valleys: Extend asphalt shingle strips from one side of valley 12 inches(300 mm) beyond center of valley. Use one-piece shingle strips without joints in the valley. Fasten with extra nail in upper end of shingle. Install asphalt shingle courses from other side of valley and cut back to a straight line 2 inches(50 mm) short of valley centerline. Trim upper concealed corners of cut-back shingle strips.

1. Do not nail asphalt shingles within 6 inches(150 mm) of valley center.
2. Set trimmed, concealed-corner asphalt shingles in a 3-inch-(75-mm-) wide bed of asphalt roofing cement.

G. Open Valleys: Cut and fit asphalt shingles at open valleys, trimming upper concealed corners of shingle strips. Maintain uniform width of exposed open valley from highest to lowest point.

1. Set valley edge of asphalt shingles in a 3-inch-(75-mm-) wide bed of asphalt roofing cement.
2. Do not nail asphalt shingles to metal open valley flashings.

H. Ridge Vents: Install continuous ridge vents over asphalt shingles according to manufacturer's written instructions. Fasten with roofing nails of sufficient length to penetrate sheathing.

I. Ridge and Hip Cap Shingles: Maintain same exposure of cap shingles as roofing shingle exposure. Lap cap shingles at ridges to shed water away from direction of prevailing winds. Fasten with roofing nails of sufficient length to penetrate sheathing.

END OF SECTION 073113

SECTION 073213
CLAY ROOF TILES

PART 1 - GENERAL

1.1 SUMMARY

A. This Section includes the following:
   1. Clay roof tiles.
   2. Tile accessories.
   3. Felt underlayment.
   4. Self-adhering sheet underlayment.

1.2 SUBMITTALS

A. Product Data: For each type of product indicated.

B. Samples: For each type of clay tile, clay tile accessory, and fastening.

C. Research/evaluation reports.

D. Maintenance data.

1.3 QUALITY ASSURANCE

A. Fire-Test-Response Characteristics: Provide clay tiles and related roofing materials with the fire-test-response characteristics indicated, as determined by testing identical products per test method indicated below by UL or another testing and inspecting agency acceptable to authorities having jurisdiction. Identify materials with appropriate markings of applicable testing and inspecting agency.

   1. Exterior Fire-Test Exposure: Class A; UL 790 or ASTM E 108 for application and roof slopes indicated.

B. Preinstallation Conference: Conduct conference at to be determined at time of contract.

C. The installation shall conform to FBC (latest edition) RAS, TAS standards for high wind velocity hurricane zones. Contractor shall secure all permitting and inspections.

PART 2 - PRODUCTS

2.1 CLAY TILES

A. Available Products: Subject to compliance with requirements, products that may be incorporated into the Work include, but are not limited to, the following:

B. Products: Subject to compliance with requirements, provide one of the following:

   1. Altusa/Interclay, Corp.;.
   2. Ameri-Clay Roof Tile;.
   3. Claymex Brick & Tile Co.;.
   4. Deleo Clay Tile;.

5. D'Hanis Brick & Tile Company;.
6. Gladding, McBean, Div. of Pacific Coast Building Products, Inc.;.
7. International Roofing Products, Inc.;.
8. Ludowici Roof Tile, Inc.;.
9. MCA Tile;.
10. US Tile Co.;.
11. Zion Tile Corp.;.

C. Clay Tile: ASTM C 1167, molded- or extruded-clay roof tile units of shape and configuration indicated, kiln fired to vitrification, and free of surface imperfections. Provide with fastening holes prepunched at factory before firing.

1. Durability: Grade 1.
2. High-Profile Shape: Type I, Spanish or S straight mission, two piece straight barrel mission, two piece.
3. Flat Shape: Type III, flat shingle flat interlocking.
4. High Low-Profile-Shape Clay Tile Accessories: Ridge vent ridge end hip and hip starter header course L-shaped rake edge roll rake edge starter end band terminal eave closure and top fixture units, color to match roof tile.
5. Flat-Shape Clay Tile Accessories: Ridge and closed ridge end hip and hip starter header course L-shaped rake edge starter end band and terminal units, color to match roof tile.

2.2 ACCESSORIES

A. Asphalt Roofing Cement: ASTM D 4586, Type II, asbestos free.

B. Cold-Applied Adhesive: Manufacturer's standard asphalt-based, one- or two-part, asbestos-free, cold-applied adhesive specially formulated for compatibility and use with underlayments.

C. Foam Adhesive: Two-component polyurethane expanding adhesive recommended for application by tile manufacturer.

D. Mortar: ASTM C 270, Type M, natural color for concealed-from-view mortar.

1. Mortar Pigment: ASTM C 979. Produce mortar matching the color of tile selected for exposed-to-view mortar.

E. Eave Closure: Manufacturer's standard EPDM, stainless-steel eave closure formed to shape of tile.

F. Wood Nailers, Beveled Cant Strips and Battens: Pressure treated wood.

2.3 FASTENERS

A. Roofing Nails: ASTM F 1667, copper, 0.135-inch- (3.4-mm-) aluminum, 0.1055-inch- (2.7-mm-) hot-dip galvanized steel, 0.1055-inch- (2.7-mm-) diameter shank, sharp-pointed, conventional roofing nails with barbed shanks; minimum 3/8-inch- (10-mm-) diameter head; and of sufficient length to penetrate 3/4 inch (19 mm) into wood battens solid wood decking roof-deck sheathing.

B. Felt Underlayment Nails: Aluminum, stainless-steel, or hot-dip galvanized steel wire with low-profile capped heads or disc caps, 1-inch (25-mm) minimum diameter.

C. Wood Batten Nails: ASTM F 1667, common or box, steel wire, flat head, and smooth shank.

D. Wire Ties: Stainless steel, 0.083-inch (2.1-mm) minimum diameter.

E. Twisted-Wire-Tie System: Continuously twisted two-wire unit with loops formed at 6 inches (150 mm) apart, minimum 0.1-inch- (2.5-mm-) diameter brass wire and 0.06-inch- (1.5-mm-) diameter brass tie wires 0.1-inch- (2.5-mm-) diameter copper wire and 0.06-inch- (1.5-mm-) diameter brass tie wires 0.083-inch- (2.1-mm-) diameter stainless-steel wire and 0.037-inch- (0.94-mm-) diameter stainless-steel tie wires 0.083-inch- (2.1-mm-) diameter galvanized steel wire and 0.037-inch- (0.94-mm-) diameter galvanized steel tie wires, with matching-metal folding clip anchors.

F. Single-Line Wire-Tie System: Interconnecting eave-to-ridge system, minimum 0.1-inch- (2.5-mm-) diameter brass 0.09-inch- (2.3-mm-) diameter galvanized steel wire, preformed to accommodate tile type and application indicated.

G. Hook Nails: One-piece wind lock and tile fastener system, minimum 0.1-inch- (2.5-mm-) diameter brass 0.09-inch- (2.3-mm-) diameter galvanized steel wire, for direct deck nailing.

H. Tile Locks: Brass Copper Stainless-steel Hot-dip galvanized steel, 0.1-inch- (2.5-mm-) diameter wire device designed to secure butt edges of cover tiles.

I. Storm Clips: Brass Stainless-steel Hot-dip galvanized steel strap-type, 0.04-by-1/2-inch (1.0-by-13-mm) L-shaped retainer clips designed to secure side edges of tiles. Provide with two fastener holes in base flange.

2.4 UNDERLAYMENT MATERIALS

A. Roof Felt Underlayment: ASTM D 226, Type II, asphalt-saturated organic felt, unperforated.

B. Roof Felt Underlayment: ASTM D 2626, asphalt-saturated and -coated organic felt, dusted with fine mineral surfacing on both sides, unperforated.

C. Roll Roofing Underlayment: ASTM D 249, Type I, asphalt-saturated and -coated organic felt, mineral-granule surfaced.

D. Self-Adhering Sheet Underlayment, Granular Surfaced: ASTM D 1970, minimum of 55 mils (1.4 mm) thick; glass-fiber-mat-reinforced, SBS-modified asphalt; mineral-granule surfaced; with release-paper backing; cold applied. Provide primer for adjoining concrete or masonry surfaces to receive underlayment.

E. Self-Adhering Sheet Underlayment, Polyethylene Faced: ASTM D 1970, minimum of 40 mils (1.0 mm) thick; slip-resisting, polyethylene-film-reinforced top surface laminated to SBS-modified asphalt adhesive, with release-paper backing; cold applied. Provide primer for adjoining concrete or masonry surfaces to receive underlayment.

2.5 SHEET METAL FLASHING AND TRIM

A. Sheet Metal Flashing and Trim: Comply with requirements in Division 07 Section "Sheet Metal Flashing and Trim."

1. Sheet Metal: Stainless steel, Zinc-tin alloy-coated stainless steel, Coil-coated aluminum Anodized aluminum Aluminum, mill finished , Galvanized steel.24 ga.

PART 3 - EXECUTION

3.1 UNDERLAYMENT INSTALLATION

A. General: Install underlayments according to tile manufacturer's written recommendations and recommendations in NRCA's "The NRCA Roofing and Waterproofing Manual."

B. Single-Layer Roof Felt Underlayment: Install perpendicular to roof slope in parallel courses. Lap sides a minimum of 2 inches (50 mm) over underlying course. Lap ends a minimum of 4 inches (100 mm). Stagger end laps between succeeding courses at least 72 inches (1830 mm). Fasten with felt underlayment roofing nails.

1. Install felt underlayment on roof deck not covered by self-adhering sheet underlayment. Lap sides not less than 3 inches (75 mm) over self-adhering sheet underlayment in direction to shed water. Lap ends not less than 6 inches (150 mm) over self-adhering sheet underlayment.

C. Double-Layer Roof Felt Underlayment: Install perpendicular to roof slope in parallel courses. Install a 19-inch- (485-mm-) wide starter course at eaves and completely cover with full-width second course. Install succeeding courses lapping previous courses 19 inches (485 mm) in shingle fashion. Lap ends a minimum of 6 inches (150 mm). Stagger end laps between succeeding courses at least 72 inches (1830 mm). Fasten with roofing nails.

1. Install roof felt underlayment on roof sheathing not covered by self-adhering sheet underlayment. Lap edges not less than 3 inches (75 mm) over self-adhering sheet underlayment in direction to shed water.

D. Double-Layer Roof Felt/Roll Roofing Underlayment:

1. Install single layer of roof felt underlayment perpendicular to roof slope in parallel courses. Lap sides a minimum of 2 inches (50 mm) over underlying course. Lap ends a minimum of 4 inches (100 mm). Stagger end laps between succeeding courses at least 72 inches (1830 mm). Fasten with roofing nails.
2. Install roll roofing underlayment in same direction as roof felt underlayment in parallel courses. Lap ends a minimum of 6 inches (150 mm). Stagger end laps between succeeding courses at least 72 inches (1830 mm).

   a. Mechanically fasten over felt underlayment.
   b. Adhere to felt underlayment with uniform coating of cold-applied adhesive.

E. Self-Adhering Sheet Underlayment: Install wrinkle free, complying with low-temperature installation restrictions of underlayment manufacturer if applicable. Install at locations indicated below, lapped in direction to shed water. Lap sides not less than 3-1/2 inches (89 mm). Lap ends not less than 6 inches (150 mm), staggered 24 inches (600 mm) between succeeding courses. Roll laps with roller. Cover underlayment within seven days.

F. Double-Layer Roof Felt/Self-Adhering Sheet Underlayment:

1. Install roof felt underlayment perpendicular to roof slope in parallel courses. Lap sides a minimum of 2 inches (50 mm) over underlying course. Lap ends a minimum of 4 inches (100 mm). Stagger end laps between succeeding courses at least 72 inches (1830 mm). Fasten with roofing nails.
2. Install self-adhering sheet underlayment, wrinkle free, on roof felt underlayment. Comply with low-temperature installation restrictions of underlayment manufacturer if applicable. Lap sides not less than 3-1/2 inches (89 mm) in direction to shed water. Lap ends not less than 6 inches (150 mm), staggered 24 inches (600 mm) between succeeding courses. Roll laps with roller. Cover underlayment within seven days.

3.2 METAL FLASHING INSTALLATION

A. General: Install metal flashings and other sheet metal to comply with requirements in Division 07 Section "Sheet Metal Flashing and Trim."

1. Install metal flashings according to tile manufacturer's written recommendations and recommendations in NRCA's "The NRCA Roofing and Waterproofing Manual."

3.3 WOOD NAILERS

A. Install wood nailers at ridges hips rakes and securely fasten to roof deck.

B. Install beveled wood cant at eaves and securely fasten to roof deck.

C. Install nominal 1-by-2-inch (25-by-50-mm) wood battens horizontally over 1/2-inch- (13-mm-) high, pressure-preservative-treated wood lath strips 48 inches (1200 mm) long with ends separated by 1/2 inch (13 mm) at spacing required by roof tile manufacturer and securely fasten to roof deck.

1. Install nominal 1-by-2-inch (25-by-50-mm) Insert dimensions wood counter battens vertically spaced 24 inches (600 mm) apart and securely fasten to roof deck.

3.4 TILE INSTALLATION

A. General: Install roof tiles according to manufacturer's written instructions and recommendations in RTI/WSRCA's "Concrete and Clay Roof Tile Design Criteria Installation Manual for Moderate Climate Regions," and to NRCA's "The NRCA Roofing and Waterproofing Manual."

1. Maintain uniform exposure and coursing of tiles throughout roof.
2. Extend tiles 2 inches (50 mm) over eave fasciae.
3. Nail Fastening: Drive nails to clear the tile so the tile hangs from the nail and is not drawn up.
   a. Install wire through nail holes of cut tiles that cannot be nailed directly to roof deck, and fasten to nails driven into deck.
4. Wire Tie Fastening: Install wire-tie systems and fasten tile according to manufacturer's written instructions.
5. Foam-Adhesive Setting: Install tile according to FRSA/NTRMA's "Concrete and Clay Roof Tile Installation Manual."
6. Install storm clips to capture edges of longitudinal sides of tiles and securely fasten to roof deck.
7. Install tile locks to support and lock overlying tile butts to underlying tiles.

8. Cut and fit tiles neatly around roof vents, pipes, ventilators, and other projections through roof. Fill voids with mortar.
9. Install tiles with color blend approved by Architect.

END OF SECTION 073213

SECTION 073216
CONCRETE ROOF TILES

PART 1 – GENERAL

1.1 SUMMARY

A. This Section includes the following:
   1. Concrete roof tiles.
   2. Tile accessories.
   3. Felt underlayment.
   4. Self-adhering sheet underlayment.

1.2 SUBMITTALS

A. Product Data: For each type of product indicated.

B. Samples: For each type of concrete tile, concrete tile accessory, and fastening.

C. Research/evaluation reports.

D. Maintenance data.

1.3 QUALITY ASSURANCE

A. Fire-Test-Response Characteristics: Provide concrete tiles and related roofing materials with the fire-test-response characteristics indicated, as determined by testing identical products per test method indicated below by UL or another testing and inspecting agency acceptable to authorities having jurisdiction. Identify materials with appropriate markings of applicable testing and inspecting agency.

   1. Exterior Fire-Test Exposure: Class A; UL 790 or ASTM E 108 for application and roof slopes indicated.

B. Preinstallation Conference: Conduct conference at Location determined at contract award.

C. The installation shall conform to FBC (latest edition) RAS, TAS standards for high wind velocity hurricane zones. Contractor shall secure all permitting and inspections.

PART 2 - PRODUCTS

2.1 CONCRETE TILE

A. Available Products: Subject to compliance with requirements, products that may be incorporated into the Work include, but are not limited to, the following:

B. Products: Subject to compliance with requirements, provide one of the following:

   1. Bartile;.
   2. Dectile;.

3. Eagle Roofing Products;.
4. Entegra Roof Tile Corp.;.
5. Hanson Roof Tile, Inc.;.
6. MonierLifetile;.
7. Staco Roof Tile;.
8. Vande Hey-Raleigh Mfg., Inc.;.
9. Westile Roofing Products;.

C. Concrete Tile: ASTM C 1492, molded- or extruded-concrete roof tile units of shape and configuration indicated, with integral color, and free of surface imperfections. Provide with fastening holes predrilled at factory when manufactured.

1. High-Profile Shape: Type I, Spanish or S.
2. Low-Profile Shape: Type III, flat shingle.
3. High-Profile-Shape Concrete Tile Accessories: Ridge ridge vent ridge end hip and hip starter header course L-shaped rake edge roll rake edge starter end band and terminal units, color to match roof tile.
4. Low-Profile-Shape Concrete Tile Accessories: Ridge and closed ridge end hip and hip starter header course L-shaped rake edge starter end band and terminal units, color to match roof tile.

2.2 ACCESSORIES

A. Asphalt Roofing Cement: ASTM D 4586, Type II, asbestos free.

B. Cold-Applied Adhesive: Manufacturer's standard asphalt-based, one- or two-part, asbestos-free, cold-applied adhesive specially formulated for compatibility and use with underlayments.

C. Foam Adhesive: Two-component polyurethane expanding adhesive recommended for application by tile manufacturer.

D. Mortar: ASTM C 270, Type M, natural color for concealed-from-view mortar.

1. Mortar Pigment: ASTM C 979. Produce mortar matching the color of tile selected for exposed-to-view mortar.

E. Eave Closure: Manufacturer's standard EPDM, stainless-steel, zinc-tin alloy-coated, stainless-steel, coil-coated aluminum. Eave closure formed to shape of tile.

F. Ridge Closure: Manufacturer's standard EPDM ridge closure formed to shape of tile.

G. Wood Nailers, Beveled Cant Strips and Battens: Comply with requirements in for pressure-preservative-treated wood.

2.3 FASTENERS

A. Roofing Nails: ASTM F 1667, hot-dip galvanized steel, 0.1055-inch-(2.7-mm-) diameter shank, sharp-pointed, conventional roofing nails with barbed shanks; minimum 3/8-inch-(10-mm-) diameter head; and of sufficient length to penetrate 3/4 inch(19 mm) into solid wood decking, roof deck sheathing.

B. Felt Underlayment Nails: Aluminum, stainless-steel, or hot-dip galvanized steel wire with low-profile capped heads or disc caps, 1-inch(25-mm) minimum diameter.

C. Wood Batten Nails: ASTM F 1667, common or box, steel wire, flat head, and smooth shank.

D. Wire Ties: Copper, Brass or Stainless steel, 0.083-inch(2.1-mm) minimum diameter.

E. Hook Nails: One-piece wind lock and tile fastener system, minimum 0.1-inch-(2.5-mm-) ss 0.09-inch-(2.3-mm-) diameter galvanized steel wire, for direct deck nailing.

F. Tile Locks: Bras, Copper, Stainless-steel or Hot-dip galvanized steel, 0.1-inch-(2.5-mm-) diameter wire device designed to secure butt edges of cover tiles.

G. Storm Clips: Brass, Stainless-steel or Hot-dip galvanized steel strap-type, 0.04-by-1/2-inch(1.0-by-13-mm) L-shaped retainer clips designed to secure side edges of tiles. Provide with two fastener holes in base flange.

2.4 UNDERLAYMENT MATERIALS

A. Roof Felt Underlayment: ASTM D 226, Type II, asphalt-saturated organic felt, unperforated.

B. Roof Felt Underlayment: ASTM D 2626, asphalt-saturated and -coated organic felt, dusted with fine mineral surfacing on both sides, unperforated.

C. Roll Roofing Underlayment: ASTM D 249, Type I, asphalt-saturated and -coated organic felt, mineral-granule surfaced.

D. Self-Adhering Sheet Underlayment, Granular Surfaced: ASTM D 1970, minimum of 55 mils(1.4 mm) thick; glass-fiber-mat-reinforced, SBS-modified asphalt; mineral-granule surfaced; with release-paper backing; cold applied. Provide primer for adjoining concrete or masonry surfaces to receive underlayment.

E. Self-Adhering Sheet Underlayment, Polyethylene Faced: ASTM D 1970, minimum of 40 mils(1.0 mm) thick; slip-resisting, polyethylene-film-reinforced top surface laminated to SBS-modified asphalt adhesive, with release-paper backing; cold applied. Provide primer for adjoining concrete or masonry surfaces to receive underlayment.

2.5 SHEET METAL FLASHING AND TRIM

A. Sheet Metal Flashing and Trim: Comply with requirements in Division 07 Section "Sheet Metal Flashing and Trim."

1. Sheet Metal: Stainless steel Zinc-tin alloy-coated stainless steel Coil-coated aluminum Anodized aluminum or Galvanized steel.

PART 3 - EXECUTION

3.1 UNDERLAYMENT INSTALLATION

A. General: Install underlayments according to tile manufacturer's written recommendations and recommendations in NRCA's "The NRCA Roofing and Waterproofing Manual."

B. Single-Layer Roof Felt Underlayment: Install perpendicular to roof slope in parallel courses. Lap sides a minimum of 2 inches(50 mm) over underlying course. Lap ends a minimum of 4 inches(100 mm). Stagger end laps between succeeding courses at least 72 inches(1830 mm). Fasten with felt underlayment roofing nails.

1. Install felt underlayment on roof deck not covered by self-adhering sheet underlayment. Lap sides not less than 3 inches(75 mm) over self-adhering sheet underlayment in direction to shed water. Lap ends not less than 6 inches(150 mm) over self-adhering sheet underlayment.

C. Double-Layer Roof Felt Underlayment: Install perpendicular to roof slope in parallel courses. Install a 19-inch-(485-mm-) wide starter course at eaves and completely cover with full-width second course. Install succeeding courses lapping previous courses 19 inches(485 mm) in shingle fashion. Lap ends a minimum of 6 inches(150 mm). Stagger end laps between succeeding courses at least 72 inches(1830 mm). Fasten with felt underlayment roofing nails.

1. Install roof felt underlayment on roof sheathing not covered by self-adhering sheet underlayment. Lap edges not less than 3 inches(75 mm) over self-adhering sheet underlayment in direction to shed water.

D. Double-Layer Roof Felt/Roll Roofing Underlayment:

1. Install single layer of roof felt underlayment on roof deck perpendicular to roof slope in parallel courses. Lap sides a minimum of 2 inches(50 mm) over underlying course. Lap ends a minimum of 4 inches(100 mm). Stagger end laps between succeeding courses at least 72 inches(1830 mm). Fasten with felt underlayment roofing nails.
2. Install roll roofing underlayment in same direction as roof felt underlayment in parallel courses. Lap ends a minimum of 6 inches(150 mm). Stagger end laps between succeeding courses at least 72 inches(1830 mm).

   a. Mechanically fasten over felt underlayment.
   b. Adhere to felt underlayment with uniform coating of cold-applied adhesive or uniform coating of asphalt roofing cement.

E. Self-Adhering Sheet Underlayment: Install wrinkle free, complying with low-temperature installation restrictions of underlayment manufacturer if applicable. Install at locations indicated, lapped in direction to shed water. Lap sides not less than 3-1/2 inches(89 mm). Lap ends not less than 6 inches(150 mm), staggered 24 inches(600 mm) between succeeding courses. Roll laps with roller. Cover underlayment within seven days.

F. Double-Layer Roof Felt/Self-Adhering Sheet Underlayment:

1. Install roof felt underlayment perpendicular to roof slope in parallel courses. Lap sides a minimum of 2 inches(50 mm) over underlying course. Lap ends a minimum of 4 inches(100 mm). Stagger end laps between succeeding courses at least 72 inches(1830 mm). Fasten with felt underlayment roofing nails.
2. Install self-adhering sheet underlayment, wrinkle free, on roof felt underlayment. Comply with low-temperature installation restrictions of underlayment manufacturer if applicable. Lap sides not less than 3-1/2 inches(89 mm) in direction to shed water. Lap ends not less than 6 inches(150 mm), staggered 24 inches(600 mm) between succeeding courses. Roll laps with roller. Cover underlayment within seven days.

3.2 METAL FLASHING INSTALLATION

A. General: Install metal flashings and other sheet metal to comply with requirements in Division 07 Section "Sheet Metal Flashing and Trim."

1. Install metal flashings according to tile manufacturer's written recommendations and recommendations in NRCA's "The NRCA Roofing and Waterproofing Manual."

3.3 WOOD NAILERS

A. Install wood nailers at ridges hips rakes and securely fasten to roof deck.

B. Install beveled wood cant at eaves and securely fasten to roof deck.

3.4 CONCRETE TILE INSTALLATION

A. General: Install roof tiles according to manufacturer's written instructions and recommendations in RTI/WSRCA's "Concrete and Clay Roof Tile Design Criteria Installation Manual for Moderate Climate Regions," and to NRCA's "The NRCA Roofing and Waterproofing Manual."

1. Maintain uniform exposure and coursing of tiles throughout roof.
2. Extend tiles 2 inches(50 mm) over eave fasciae.
3. Nail Fastening: Drive nails to clear the tile so the tile hangs from the nail and is not drawn up.

   a. Install wire through nail holes of cut tiles that cannot be nailed directly to roof deck, and fasten to nails driven into deck.

4. Foam-Adhesive or Mortar Setting: Install tile according to FRSA/NTRMA's "Concrete and Clay Roof Tile Installation Manual."
5. Install storm clips to capture edges of longitudinal sides of tiles and securely fasten to roof deck.
6. Install tile locks to support and lock overlying tile butts to underlying tiles.
7. Cut and fit tiles neatly around roof vents, pipes, ventilators, and other projections through roof. Fill voids with mortar.
8. Install tiles with color blend approved by Architect.

END OF SECTION 073216

SECTION 075116
BUILT-UP COAL TAR ROOFING

PART 1 - GENERAL

1.1 SUMMARY

A. This Section includes built-up coal-tar roofing systems.

1.2 DEFINITIONS

A. Bitumen: A generic term for either asphalt or coal-tar pitch.

B. Hot Coal-Tar Pitch: Coal-tar pitch heated to its equiviscous temperature, the temperature at which its viscosity is 25 centipoise for either mopping or mechanical application, within a range of plus or minus 25 deg F (14 deg C), measured at the mop cart or mechanical spreader immediately before application.

C. Hot Roofing Asphalt: Roofing asphalt heated to its equiviscous temperature, the temperature at which its viscosity is 125 centipoise for mopping application and 75 centipoise for mechanical application, within a range of plus or minus 25 deg F (14 deg C), measured at the mop cart or mechanical spreader immediately before application.

1.3 SUBMITTALS

A. Product Data: For each product indicated.

B. Shop Drawings: Include plans, elevations, sections, details, and attachments to other Work.

C. Samples: For each product included in membrane roofing system.

D. Research/evaluation reports.

E. Maintenance data.

1.4 QUALITY ASSURANCE

A. Installer Qualifications: A qualified installer, approved by manufacturer to install manufacturer's products.

B. Source Limitations: Obtain components for roofing system from or approved by roofing system manufacturer.

C. Fire-Test-Response Characteristics: Provide roofing materials with the fire-test-response characteristics indicated as determined by testing identical products per test method below by UL, FMG, or another testing and inspecting agency acceptable to authorities having jurisdiction.

1. Exterior Fire-Test Exposure: Class A; ASTM E 108, for application and roof slopes indicated.

D. Preinstallation Conference: Conduct conference at Project site.

E. The installation shall conform to FBC (latest edition) RAS, TAS standards for high wind velocity hurricane zones. Contractor shall secure all permitting and inspections.

1.5 WARRANTY

A. Special Warranty: Manufacturer's standard form, without monetary limitation, in which manufacturer agrees to repair or replace components of roofing system that fail in materials or workmanship within 15 years from date of Substantial Completion. Failure includes roof leaks.

PART 2 - PRODUCTS

2.1 MANUFACTURERS

A. Available Manufacturers: Subject to compliance with requirements, manufacturers offering products that may be incorporated into the Work include, but are not limited to, the following:

B. Manufacturers: Subject to compliance with requirements, provide products by one of the following:

1. Built-up Coal-Tar Roofing:

a. Hickman, W. P. Systems Inc.
b. Honeywell Commercial Roofing Systems.
c. Koppers Industries.

2.2 BASE-SHEET MATERIALS

A. Sheathing Paper: Red-rosin type, minimum 3 lb/100 sq. ft. (0.16 kg/sq. m).

B. Base Sheet: ASTM D 4601, Type II, nonperforated, asphalt-impregnated and -coated, glass-fiber sheet, dusted with fine mineral surfacing on both sides.

C. Base Sheet: ASTM D 4897, Type II, venting, nonperforated, heavyweight, asphalt-impregnated and -coated, glass-fiber base sheet with coarse granular surfacing or embossed venting channels on bottom surface.

2.3 ROOFING MEMBRANE PLIES

A. Ply Sheet: ASTM D 227, coal-tar-saturated organic felt.

B. Ply Sheet: ASTM D 4990, Type I, coal-tar-impregnated, glass-fiber felt and the physical properties of ASTM D 2178, Type IV.

2.4 FLASHING MATERIALS

A. Backer Sheet: ASTM D 2178, Type IV, asphalt-impregnated, glass-fiber felt.

B. Backer Sheet: Roofing system manufacturer's standard spun-bonded, nonwoven, polyester-reinforced fabric, of standard color and weight, suitable for application method specified.

C. Flashing Sheet: ASTM D 6164, Type I or II, polyester-reinforced, SBS-modified asphalt sheet; granular surfaced; suitable for application method specified and as follows:

1. Granule Color: White.

D. Flashing Sheet: ASTM D 6162, Type I or II, composite polyester- and glass-fiber-reinforced, SBS-modified asphalt sheet; granular surfaced; suitable for application method specified and as follows:

1. Granule Color: White.

E. Flashing Sheet: ASTM D 6163, Type I or II, glass-fiber-reinforced, SBS-modified asphalt sheet; granular surfaced; suitable for application method specified and as follows:

1. Granule Color: White.

2.5 BITUMEN MATERIALS

A. Asphalt Primer: ASTM D 41.

B. Coal-Tar Primer: ASTM D 43.

C. Coal-Tar Pitch: ASTM D 450, Type I.

D. Roofing Asphalt: ASTM D 312, Type IV III or IV as recommended by built-up roofing system manufacturer for application.

2.6 AUXILIARY ROOFING MEMBRANE MATERIALS

A. General: Auxiliary materials recommended by roofing system manufacturer for intended use and compatible with built-up roofing.

B. Asphalt Roofing Cement: ASTM D 4586, asbestos free, of consistency required by roofing system manufacturer for application.

C. Coal-Tar Roofing Cement: ASTM D 5643, coal-tar-based roofing cement, asbestos free.

D. Fasteners: Factory-coated steel fasteners and metal or plastic plates meeting corrosion-resistance provisions in FM 4470; designed for fastening roofing membrane components to substrate; tested by manufacturer for required pullout strength; and acceptable to roofing system manufacturer.

E. Aggregate Surfacing: ASTM D 1863, No. 6 or No. 67, clean, dry, opaque, water-worn gravel or crushed stone, free of sharp edges crushed slag, free of sharp edges.

F. Walkway Pads: Polymer-modified, reconstituted solid-rubber, surface-textured, slip-resisting pads, manufactured as a traffic pad for foot traffic and acceptable to roofing system manufacturer, 1/2 inch (13 mm) thick, minimum.

1. Pad Size: Varies, to suit conditions.

2.7 SUBSTRATE BOARDS

A. Substrate Board: ASTM C 36, Type X gypsum wall board, 5/8 inch (16 mm) thick.

B. Substrate Board: ASTM C 1177/C 1177M, glass-mat, water-resistant gypsum substrate, Type X, 5/8 inch (16 mm) thick.

C. Substrate Board: ASTM C 728, perlite board, 3/4 inch (19 mm) 1 inch (25 mm) thick, seal coated.

D. Fasteners: Factory-coated steel fasteners and metal or plastic plates meeting corrosion-resistance provisions in FMG 4470, designed for fastening substrate panel to roof deck.

2.8 ROOF INSULATION

A. Extruded-Polystyrene Board Insulation: ASTM C 578, Type IV, 1.6-lb/cu. ft. (26-kg/cu. m) minimum density, square edged.

B. Polyisocyanurate Board Insulation: ASTM C 1289, Type II, felt or glass-fiber mat facer on both major surfaces.

C. Composite Polyisocyanurate Board Insulation: ASTM C 1289, faced with insulation board on one major surface, as indicated below by type, and felt or glass-fiber mat facer on the other.

D. Glass-Fiber-Board Insulation: ASTM C 726, combining glass fibers with thermosetting resin binders, faced on one side with asphalt-coated fiberglass scrim and kraft paper.

E. Tapered Insulation: Provide factory-tapered insulation boards fabricated to slope of [**1/8 inch per 12 inches (1:96)**] [**1/4 inch per 12 inches (1:48)**] <**Insert slope**>, unless otherwise indicated.

F. Provide preformed saddles, crickets, tapered edge strips, and other insulation shapes where indicated for sloping to drain. Fabricate to slopes indicated.

2.9 INSULATION ACCESSORIES

A. Fasteners: Factory-coated steel fasteners and metal or plastic plates meeting corrosion-resistance provisions in FMG 4470, designed for fastening roof insulation to substrate, and acceptable to roofing system manufacturer.

B. Cold Fluid-Applied Adhesive: Manufacturer's standard cold fluid-applied adhesive formulated to adhere roof insulation to substrate.

C. Tapered Edge Strips: ASTM C 726, glass-fiber insulation board.

D. Cover Board: ASTM C 1177/C 1177M, glass-mat, water-resistant gypsum substrate, 1/2 inch (13 mm) thick.

PART 3 - EXECUTION

3.1 SUBSTRATE BOARD INSTALLATION

A. Install substrate board with long joints in continuous straight lines, perpendicular to roof slopes with end joints staggered between rows. Tightly butt substrate boards together.

1. Fasten substrate board to top flanges of steel deck according to roofing system manufacturer's written instructions.

3.2 INSULATION INSTALLATION

A. Coordinate installing roofing system components so insulation is not exposed to precipitation or left exposed at the end of the workday.

B. Comply with roofing system manufacturer's written instructions for installing roof insulation.

C. Nailer Strips: Mechanically fasten 4-inch nominal- (89-mm actual-) width wood nailer strips of same thickness as insulation perpendicular to sloped roof deck, spaced 16 feet (4.88 m) apart for roof slopes greater than 1/4 inch per 12 inches (1:48).

D. Install tapered insulation under area of roofing to conform to slopes indicated.

E. Install one or more layers of insulation under area of roofing to achieve required thickness. Where overall insulation thickness is or greater, install 2 or more layers with joints of each succeeding layer staggered from joints of previous layer a minimum of 6 inches (150 mm) in each direction.

F. Adhered Insulation: Install each layer of insulation and adhere to substrate as follows:

1. Prime surface of concrete deck with asphalt coal-tar primer at a rate of 3/4 gal./100 sq. ft. (0.3 L/sq. m) and allow primer to dry.
2. Set each layer of insulation in a solid mopping of hot roofing asphalt coal-tar pitch.
3. Set each layer of insulation in a cold fluid-applied adhesive.

G. Mechanically Fastened Insulation: Install each layer of insulation and secure to deck using mechanical fasteners specifically designed and sized for fastening specified board-type roof insulation to deck type.

H. Mechanically Fastened and Adhered Insulation: Install each layer of insulation and secure first layer of insulation to deck using mechanical fasteners specifically designed and sized for fastening specified board-type roof insulation to deck type.

1. Install subsequent layers of insulation in a solid mopping of hot roofing asphalt coal-tar pitch.
2. Install subsequent layers of insulation in a cold fluid-applied adhesive.

I. Install cover boards over insulation with long joints in continuous straight lines with end joints staggered between rows. Loosely butt cover boards together and fasten to roof deck.

3.3 ROOFING MEMBRANE INSTALLATION

A. Install built-up roofing membrane system according to roofing system manufacturer's written instructions and applicable recommendations of ARMA/NRCA's "Quality Control Guidelines for the Application of Built-up Roofing."

B. Where roof slope exceeds 1/2 inch per 12 inches (1:24), install sheets of built-up roofing membrane parallel with slope and backnail.

C. Coordinate installing roofing system components so insulation and roofing membrane sheets are not exposed to precipitation or left exposed at the end of the workday or when rain is forecast.

D. Substrate-Joint Penetrations: Prevent coal-tar pitch or roofing asphalt from penetrating substrate joints, entering building, or damaging roofing system components or adjacent building construction.

E. Loosely lay one course of sheathing paper, lapping edges and ends a minimum of 2 inches (50 mm) and 6 inches (150 mm), respectively.

F. Install one lapped course of base sheet, extending sheet over and terminating beyond cants. Attach base sheet as follows:

1. Mechanically fasten to substrate.
2. Spot- or strip-mop to substrate with hot roofing asphalt.
3. Adhere to substrate in a solid mopping of hot roofing asphalt.

G. Install four ply sheets starting at low point of roofing system. Align ply sheets without stretching. Shingle side laps of ply sheets uniformly to achieve required number of plies throughout thickness of roofing membrane. Shingle in direction to shed water. Extend ply sheets over and terminate beyond cants.

1. Embed each ply sheet in a solid mopping of hot coal-tar pitch.

H. Composite Roofing Membrane: Install one lapped coal-tar, glass-fiber felt ply sheet course over shingled organic felt ply sheets according to roofing system manufacturer's written instructions, starting at low point of roofing system. Offset laps from laps of preceding ply sheets and align ply sheet without stretching. Lap in direction to shed water. Embed ply sheet in a solid mopping of hot coal-tar pitch applied at rate required by roofing system manufacturer. Extend ply sheet over and terminate beyond cants.

I. Aggregate Surfacing: Promptly after installing and testing roofing membrane, base flashing, and stripping, flood-coat roof surface with 70 lb/100 sq. ft. (3.5 kg/sq. m) of hot coal-tar pitch. While flood coat is hot and fluid, cast the following average weight of aggregate in a uniform course:

1. Aggregate Weight: 300 lb/100 sq. ft. (15 kg/sq. m).

J. Walkway Pads: Install walkway pads using units of size indicated or, if not indicated, of manufacturer's standard size according to walkway pad manufacturer's written instructions.

1. Sweep away loose aggregate surfacing and set walkway pads in additional flood coat of hot coal tar.

3.4 FLASHING AND STRIPPING INSTALLATION

A. Install base flashing over cant strips and other sloping and vertical surfaces, at roof edges, and at penetrations through roof, and secure to substrates according to roofing system manufacturer's written instructions.

B. Extend base flashing up walls or parapets a minimum of 8 inches (200 mm) above roofing membrane and 4 inches (100 mm) onto field of roofing membrane.

C. Mechanically fasten top of base flashing securely at terminations and perimeter of roofing.

D. Install stripping, according to roofing system manufacturer's written instructions, where metal flanges and edgings are set on built-up roofing.

END OF SECTION 075116

SECTION 075200
MODIFIED BITUMEN ROOFING

PART 1 GENERAL

1.1 SECTION INCLUDES

A. Anchor Sheet, Base Sheet, Interply Sheets and Roofing Membrane.

B. Flashing Collar (non-metallic).

C. Traffic Walkway.

D. Flexible (non-metallic) Flashing.

E. Rigid Roof Insulation.

F. Metal Flashing and Counter flashing.

G. Cants.

H. Sealant for roof area.

I. Related work in other Sections

1. Section 07050 – Roof Preparation and Removal

1.2 REFERENCE STANDARDS

A. ASTM C165 - Measuring Compressive Properties of Thermal Insulation.

B. ASTM D41 - Asphalt Primer Used in Roofing and Waterproofing.

C. ASTM D312 - Asphalt Used in Roofing.

D. ASTM D4601 - Asphalt Coated Glass Fiber Base Sheet Used in Roofing.

E. ASTM D5147 - Methods and Testing for Modified Bitumen Roofing Felts.

F. FM - Factory Mutual.

G. FS – Federal Specifications.

H. Florida Building Code Roofing Application Standard (RAS) 150

1.3 QUALITY ASSURANCE

A. Roofing Manufacturer: Roofing system and insulation shall consist of materials and components supplied by a single Manufacturer with a minimum of ten (10) years

successful experience in this type of work for a non-prorated, “single source”, No-Dollar-Limit (NDL) Guarantee and responsibility.

B. Roofing Contractor: Roofing work shall be performed by a firm certified and approved in writing by the Roofing Manufacturer for specified guarantee and have a minimum five (5) years successful experience in this type of work.

C. Pre-Installation Conference: Prior to starting roofing work, the Roofing Manufacturer’s Representative shall meet with the General Contractor, the Roofing Contractor, the City Engineering Inspector and the Architect at the job site for a start-up review and instruction period. The General Contractor shall record minutes of the meeting and transmit a copy to the Architect.

D. Inspection at Completion: Upon completion of the installation, an inspection shall be conducted by an Authorized Technical Representative of the Roofing Manufacturer to verify that the roofing system has been installed to the Roofing Manufacturer's most current specifications and details and a written guarantee shall be issued.

E. Deviations from Specifications: There shall be NO DEVIATIONS from this specification and the Roofing Manufacturer's approved specification without PRIOR WRITTEN approval of the Architect and the Roofing Manufacturer.

F. Codes: The Roofing system and insulation shall comply with all requirements of the Florida Building Code. Any detail condition not specifically covered by drawing detail shall be submitted to the Architect for approval and be acceptable by the manufacturer for all the warranties and guarantees described.

G. The installation shall conform to FBC (latest edition) RAS, TAS standards for high wind velocity hurricane zones. Contractor shall secure all permitting and inspections.

1.4 SUBMITTALS

Submit the following in accordance with Section 01340, “Submittals”. Work shall not commence until all submittals have been approved by the Architect.

A. Specimen of Roofing Guarantee: Prior to executing contracts or before as noted.

B. Specimen of Sheet Metal Warranty: Prior to executing contracts or before as noted.

C. Insulation Layout Shop Drawing and Anchorage: In accordance with the requirements of the Building Code.

D. Sheet Metal Details and Anchorage: In accordance with the requirements of the Building Code.

E. Miami-Dade Notice of Acceptance: With list of all materials, method of application and spacing patterns of anchors.

F. Roofing Manufacturer's Product Data: Indicating full compliance with requirements of this section, including installation specifications. Data must be clearly marked to

identify all materials and accessories, which the Roofing Manufacturer approves as being a complete roofing system guaranteed as a "single source" system for compliance with this section.

G. Qualification Letter: From the Roofing Manufacturer clearly describing the Roofing Contractor's certification as required under Quality Assurance in this section.

H. Certification Letter: From the Roofing Manufacturer certifying that all materials meet or exceed specified requirements and guarantee.

I. Twenty-four (24) Hour Telephone Number: Provide the Architect with a twenty-four (24) hour telephone number in case a problem arises after working hours during the course of construction.

J. Watertight Letter: From the Roofing Contractor explaining how the building will remain watertight during the entire roofing replacement operation.

K. Guarantee and Maintenance Requirements:

1. Provide a complete list of ongoing maintenance procedures.
2. Provide a list of telephone numbers, procedures and persons to contact should a leak or damage occur.

L. Samples:

1. Three (3) inch x five (5) inch samples of the roofing and flashing sheets.
2. Samples of exact anchoring devices to be used.
3. Twelve (12) inch long samples of exact sheet metal pieces to be used.
4. Full size sample of exact metal emergency overflow scupper to be used.

1.5 DELIVERY, HANDLING AND STORAGE

A. Delivery: Deliver to the job site all materials in quantities required to allow continuity of application. All materials to be in the Manufacturer's original undamaged containers, wrappings and/or boxes bearing legible Manufacturer’s identifying marks (i.e., material name, instructions, lot numbers and similar information) and approved testing agency labels.

B. Storage: Store materials out of direct exposure to the elements and in accordance with Section 01610, “Delivery, Handling, and Storage.”

1. Store all roofing materials on pallets off the ground by not less than four (4) inches, in a dry location, with a weather protective covering properly tied down. Use a “breathable” type covering such as a canvas tarpaulin. Polyethylene, plastic or other “non-breathable” coverings are not acceptable.
2. Store rolled goods on end. Do not double stack.
3. Store roof materials on roof deck in a manner so as to preclude overloading of deck and building structure.
4. Protect materials from damage.
5. Store materials such as solvents, adhesives and asphalt cutback products away from open flames, sparks or excessive heat.

C. Handling: Handle all materials in such a manner as to preclude damage and contamination with moisture or foreign matter. Handle rolled goods to prevent damage to edges or end.

D. Damaged Material: Materials that are found to be damaged or stored in any manner other than stated above will be rejected, removed and replaced at the Contractor's expense.

E. Stored Material: The City will not pay for stored material.

1.6 ENVIRONMENTAL REQUIREMENTS

A. Precipitation: Do not install roofing materials when moisture, in any form, is present on the substrate to which the roofing materials are to be applied, when foaming of hot asphalt occurs, during precipitation or if there is a probability of precipitation during application. Take precautions to ensure that applied roofing and building materials are protected from possible moisture damage or contamination.

B. Asphalt Temperature Restrictions: Special precautions shall be taken to ensure that the specified asphalt maintains a minimum acceptable four hundred twenty-five (425) degrees Fahrenheit (with a target temperature of four hundred fifty (450) degrees Fahrenheit) at the point of sheet application. Asphalt shall not be heated over five hundred (500) degrees Fahrenheit at the kettle.

1.7 GUARANTEES AND WARRANTIES

A. Roofing System and Insulation Guarantee: Roofing system and insulation shall be non-prorated, "single source," No-Dollar-Limit (NDL) guaranteed, in a single document, against leaking by the Roofing Manufacturer and Certified Applicator for a period of not less than ten (10) years from the date of acceptance. The guarantee shall be issued at no additional cost to the City.

B. Sheet Metal Warranty: The Roofing Contractor shall provide a five (5) year warranty on all new sheet metal. On the Roofing Contractor's letterhead, provide the following information and/or statements:

1. Address the letter to the City of Fort Lauderdale, 100 North Andrews Avenue, Fort Lauderdale, Florida, 33302.
2. RE: Five (5) Year Leak Service Warranty on Sheet Metal Work.
3. Identify the work by the Project Number, the Project's Name and the street address as noted on these specifications.
4. This letter is to serve as notification of our service warranty covering the sheet metal work, fasteners and installation on the above noted Project without further cost to the City, as follows:
5. This warranty period starts from the date of contract completion and acceptance by the City of Fort Lauderdale and runs for a five (5) year period from the acceptance date.

6. This warranty covers joint separation, leakage at respective joints of metal and visible detachment due to expansion at respective wood nailers and/or at other metal flashing attachments.
7. At any time during the life of the warranty, upon proper notice in writing by a City Representative, our firm will respond and repair any and all defects in the sheet metal flashing material, workmanship or any defects that may be attributable to sheet metal work installed by our firm.
8. Any alteration, attachment of objects or items to our work by others is not part of this service warranty and will void any and all warranty coverage by our firm.
9. Signed, notarized, name of signer, title and date.

PART 2 PRODUCTS

2.1 MANUFACTURER

A. Roofing System and Insulation: GAF Material Corporation, RUBEROID I-3-1-MGP, modified bitumen roofing system with Flashing Design 2XMM for installation over GAFTEMP Isotherm and Tapered Isotherm insulation, complete with all accessories as approved by the Roofing Manufacturer to comply with a Class “B” fire classification, the Building Code, the Miami-Dade Notice of Acceptance and the specified non-prorated, “single source”, NDL guarantee.

B. Alternate Manufacturers of the similar SBS Modified Bitumen system specified above may be considered by the Architect if he considers the alternate manufacturers’ product to be acceptable. The roof system components, warranties, guarantees and accessories as specified must be substantially the same to be considered.

2.2 ROOFING SYSTEM

A. Anchor Sheet: GAF Materials Corporation, GAFGLAS #75 Base Sheet, complying with ASTM D-4601, Type II.

B. Base Sheet: GAF Materials Corporation, GAFGLAS STRATAVENT Eliminator Perforated Venting Base Sheet, complying with ASTM D-4897 Type II.

C. Interply Sheet: GAF Materials Corporation, GAFGLAS FlexPly 6 Ply Felt, complying with ASTM D-2178 Type VI.

D. Roofing Membrane: GAF Materials Corporation, RUBEROID MOP PLUS (white granules), complying with ASTM D-6164, Type II, Grade G.

E. Strip Flashing (Flashing Collar): GAF Materials Corporation, RUBEROID MOP PLUS (white granules), complying with ASTM D-6164, Type II, Grade G.

F. Traffic Walkway:

1. First Ply: GAF Materials Corporation, RUBEROID MOP (SMOOTH), complying with ASTM D-6164, Type I, Grade S.

2. Second Ply (Surface Ply): GAF Materials Corporation, RUBEROID MOP PLUS (white granules), complying with ASTM D-6164, Type II, Grade G.

G. Flexible (non-metallic) Flashing:

1. First Ply: GAF Materials Corporation, RUBEROID MOP (SMOOTH), complying with ASTM D-6164, Type I, Grade S.
2. Second Ply (Top Ply): GAF Materials Corporation, RUBEROID MOP PLUS (white granules), complying with ASTM D-6164, Type II, Grade G.

H. Rigid Roof Insulation:

1. Flat Board: GAF Materials Corporation, GAFTEMP Isotherm, complying with ASTM C1289/FS HH-1-972, Class 1. NOT acceptable are board materials that deteriorate if submerged in water. Fiberboard or Perlite is NOT acceptable.
2. Tapered Board: GAF Materials Corporation, GAFTEMP Tapered Isotherm, complying with ASTM C1289/FS HH-1-972, Class 1. NOT acceptable are board materials that deteriorate if submerged in water. Fiberboard or Perlite is NOT acceptable.
3. Cricket Areas: GAF Materials Corporation, GAFTEMP Tapered Isotherm, complying with ASTM C1289/FS HH-1-972, Class 1. NOT acceptable are board materials that deteriorate if submerged in water. Fiberboard or Perlite is NOT acceptable.
4. Thickness: As indicated on drawings.
5. Insulation boards installed in hot asphalt shall have a maximum panel size of four (4) feet by four (4) feet.

2.3 ROOFING ACCESSORIES

A. Asphalt: GAF Materials Corporation, Steep Roofing Asphalt Type IV complying with ASTM D-312.

B. Bituminous Cutback Materials:

1. Primer: GAF Materials Corporation, Asphalt/Concrete Primer, complying with ASTM D-41.
2. Mastic: GAF Materials Corporation, RUBEROID Modified Flashing Cement, complying with ASTM D-4586, Type I.

C. Metal Flashing and Counter flashing:

1. Sheet Metal Flashing: Twenty-four (24) gauge stainless steel, unless otherwise noted. Fabricated in accordance with the “Architectural Sheet Metal Manual” published by the Sheet Metal and Air Conditioning Contractors National Association, Inc., “The NRCA Construction Details” published by the National Roofing Contractors Association, the Building Code and the Roofing Manufacturer’s recommendations.
2. Metal Drip Strip: .050” aluminum with three and one-half (3-1/2) inch flange and Kynar 500 finish to match existing metal roofing. Stainless steel .020” may be considered in some applications.
3. Continuous Metal Cleat: .060” aluminum.

4. Wall Counter flashing: Fry Reglet Corporation, .020" stainless steel, Type SM, Surface Mounted, Springlock Reglet and .020" stainless steel, Springlock Flashing as required to comply with the Building Code and the Miami-Dade Notice of Acceptance. Reglet and flashing shall have factory formed end laps and factory mitered and welded corners.
5. Roofing Penetration Flashing:

    a) Connected Items: This system shall be used only where the penetrating item does not allow flashing to be slipped over. S.B.C. Industries, twenty-six (26) gauge, stainless steel flashing system PL/D, P/D, C/D, SQT/D, RT/D, H/D, CH/D, I/D, A/D or U/D with standard accessory sealant cover. Size and type as required to fit penetrating item.
    b) Disconnected and/or New Items: This system shall be used only where the penetrating item will allow flashing to be slipped over. S.B.C. Industries, twenty-six (26) gauge, stainless steel flashing system PL/S, P/S, C/S, SQT/S, RT/S, H/S, CH/S, I/S, A/S or U/S with standard accessory sealant cover. Size and type as required to fit penetrating item.

6. Metal Coping Cap: MM Systems Corporation, Aluminum Snap-Lok Coping System with factory fabricated accessories such as mitered and welded corners and transitions. Coping, corners, transitions and splice plates shall have a Kynar 500 finish to match existing metal roofing. Style and gauge as required to fit existing parapets and to comply with the Building Code and the Miami-Dade Notice of Acceptance.
7. Plumbing Vents: Custom sized to fit existing vent pipes, one piece, two and one-half (2.5) pounds per square foot lead pipe flashing with minimum four (4) inch flange on roofing. Provide vent pipe extensions as required.
8. Roof Drains: Thirty (30) inches square, four (4) pounds per square foot lead flashing. Provide all new roof drain dome, screen ring clamp ring and all other damaged or missing parts for the existing roof drains to remain.

D. Pipe Mounting Pedestal: Roof Products & Systems Corporation, RPS Pipe Mounting Pedestal with equipment rail, slide rail and pipe roller assembly. Roller size as required to fit pipe.

E. Sealant: A single component, high performance, elastomeric sealant. Sonolastic NP 1 by Sonneborn Building Products; Minneapolis, MN, ASTM C920, FS TTS 0023C Type II C.

F. Granules: GAF Materials Corporation, MINERAL SHIELD Granules. Mineral granules shall be of the same color as the granule surfacing of the roofing membrane.

G. Cants: The same material as the insulation, closed cell type, one and one-half (1-1/2) inch minimum thickness. NOT acceptable are board materials that deteriorate if submerged in water. Fiberboard or Perlite is NOT acceptable.

H. Anchor Sheet Fasteners: Provide anchor sheet fasteners in accordance with the Roofing Manufacturer's instructions to comply with the Building Code and the Miami-Dade Notice of Acceptance.

PART 3 EXECUTION

3.1 PREPARATION

A. Existing Conditions: Prior to commencing work, visit the job site and verify all conditions that may in any way affect or prevent the proper execution of the work of this section and notify the City Engineering Inspector in writing. Do not proceed with any work until unsatisfactory conditions have been corrected in an acceptable manner.

B. Existing Deck: Verify that the roof deck is dry, sound, clean and smooth, free of depressions, waves or projections. The Contractor shall survey the roof with the City Engineering Inspector to identify depressions, waves and projections. The Contractor shall fill in all voids and dips to prevent ponding, compensate any high spots and seal around all roof deck penetrations with metal bitumen dams.

C. Sweep or vacuum all surfaces, removing foreign substances prior to commencement of roofing.

D. Beginning of installation means acceptance of the surface of the substrates only.

E. Existing building shall be kept watertight throughout the project's progress. The Contractor shall only remove and replace with new as much roofing as can be completed in one (1) working day. The Contractor shall provide a temporary watertight seal between existing roofing and new roofing at the end of each day.

3.2 SUBSTRATE PREPARATION

A. Primer (Asphalt/Concrete Primer): Completely prime all masonry, concrete and metal surfaces with asphalt/concrete primer where insulation or roofing membranes are to be adhered. Primer shall be applied at the rate of one (1) to two (2) gallons per square or as required by the primer manufacturer. Allow the primer adequate time to dry.

B. Anchor Sheet Application (GAFGLAS #75): Lay the anchor sheet over entire area to be roofed. Provide side laps of at least two (2) inches, end laps of at least six (6) inches and turn up vertical surfaces at least six (6) inches. Anchor to deck in accordance with the Roofing Manufacturer's instructions to comply with the Building Code and the Miami-Dade Notice of Acceptance. Comply with (RAS) 150 Table 1 for mechanical attachment.

C. Insulation Application (GAFTEMP Isotherm and GAFTEMP Tapered Isotherm): Install four (4) foot by four (4) foot maximum insulation boards snug (do NOT kick into place) with staggered board joints in a full and uniform mopping of approved asphalt applied within the EVT range at the rate of twenty (20) to forty (40) pounds per square. Stagger the joints of each additional layer by as much as possible in relation to the insulation joints in the layer(s) below (minimum six (6) inch stagger) to eliminate continuous vertical gaps. At Tapered insulation and Cricket areas, all hip and valley panels must be mitered. Laced valleys are NOT acceptable. Construct to facilitate prompt and complete removal of water off of the roof deck. Apply in accordance with the Insulation Manufacturer's instructions to comply with the (RAS) 150 and the Miami-Dade Notice of Acceptance.

D. Cant Strips (GAFTEMP Isotherm): Set closed cell type cants in a full mopping of approved asphalt.

3.3 ROOFING MEMBRANE INSTALLATION

A. Aesthetic Considerations: An aesthetically pleasing overall appearance of the finished roofing application is a standard requirement for this project. The Contractor shall make necessary preparations, utilize recommended application techniques, apply the specified materials (i.e. granules, etc.) and exercise care in ensuring that the finished application is acceptable to the Architect.

B. Roofing Application: Apply roofing in accordance with the Roofing Manufacturer's instructions to comply with (RAS) 150 and the Miami-Dade Notice of Acceptance. Application of roofing shall immediately follow application of insulation as a continuous operation. Coordinate installation of all roof related components prior to installing roofing membrane. Start the installation of all roofing plies at the low point of the roof. Cut out all manufacturing fabricated splices. Apply sheets smoothly without wrinkles, creases or fish mouths.

1. Base Sheet Application (GAFGLAS STRATAVENT Eliminator Perforated): Roll base sheet out dry, granule surface down, directly over insulation. Provide side laps of at least two (2) inches and end laps of at least four (4) inches. Stagger end laps of successive courses at least eighteen (18) inches apart. Provide perimeter venting by running the base sheet twelve (12) inches up vertical surfaces (unless detailed otherwise).
2. Interply Sheet Application (GAFGLAS FlexPly 6): Install interply sheets in a full mopping of approved asphalt applied within the EVT range at the rate of twenty (20) to forty (40) pounds per square. Install starter strips of nine and seven-eighths (9-7/8) inch and twenty-nine and one-half (29-1/2) inch widths. Apply remaining plies of full thirty-nine and three-eighths (39-3/8) inch width with a maximum seven and seven-eighths (7-7/8) inch exposure, applied shingle style. Stagger end laps of successive courses at least eighteen (18) inches apart. Interply sheets to extend at least two (2) inches above cant. Laps shall have three-eighths (3/8) inch asphalt flow out to assure sound laps.
3. Roofing Membrane Application (RUBEROID MOP PLUS): Install roofing membrane in a full mopping of approved asphalt applied at a rate of twenty-five (25) pounds per square, plus or minus fifteen (15) percent. Exert sufficient pressure on the roll during application to ensure the prevention of air pockets. Provide side laps of at least four (4) inches and end laps of at least six (6) inches. Stagger end laps of successive courses at least eighteen (18) inches apart. Membrane to extend at least two (2) inches above cant. Laps shall be rolled-in or walked-in immediately after installation and shall have three-eighths (3/8) inch asphalt flow out to assure sound laps. Broadcast mineral granules over all asphalt overruns on the roofing membrane surface, while the asphalt is still hot, to ensure a monolithic surface color.

C. Base Flashing Application: Apply base flashing in accordance with the Roofing Manufacturer's instructions to comply with (RAS) 150 and the Miami-Dade Notice of Acceptance. Application of base flashing shall immediately follow application of roofing membrane as a continuous operation. Start the installation of all base flashing plies at

the low point of the roof. Cut out all manufacturing fabricated splices. Apply sheets smoothly without wrinkles, creases or fish mouths.

1. First Ply (MOP SMOOTH): Install first ply to roofing membrane, cant and vertical surface in a solid mopping of hot asphalt applied at the rate of twenty-five (25) pounds per square, plus or minus fifteen (15) percent. Lap adjacent sheets at least six (6) inches. First ply to extend at least six (6) inches onto roofing membrane and twelve (12) inches up vertical surfaces (unless detailed otherwise). Laps shall have three-eighths (3/8) inch asphalt flow out to assure sound laps.
2. Second Ply (Top Ply) (RUBEROID MOP PLUS): Install second ply to the first ply and roofing membrane in a solid mopping of hot asphalt applied at the rate of twenty-five (25) pounds per square, plus or minus fifteen (15) percent. Lap adjacent sheets at least six (6) inches. Second ply laps shall offset first ply laps by at least six (6) inches. Second ply to extend at least six (6) inches onto roofing membrane pass the first ply and twelve (12) inches up vertical surfaces (unless detailed otherwise). Laps shall have three-eighths (3/8) inch asphalt flow out to assure sound laps. Broadcast mineral granules over all asphalt overruns on the second ply surface, while the asphalt is still hot, to ensure a monolithic surface color.
3. Fastening: Top edge of base flashing shall be fastened through one and one-half (1-1/2) inch diameter, twenty-four (24) gauge galvanized metal compression caps or a City Architect approved equal. Fasten at six (6) inches on center for heights up to twelve (12) inches. Fasten at four (4) inches on center for heights up to twenty-four (24) inches.

D. Water Cut-Off: At the end of each day's work and/or when precipitation is imminent, construct a water cut-off at all open edges in accordance with the Roofing Manufacturer's recommendations. Water cut-off shall be built using asphalt or mastic and roofing felts. Construct to withstand protracted periods of service. Water cut-off shall be completely removed prior to the resumption of roofing.

3.4 INSTALLATION OF ROOF RELATED COMPONENTS

Unless otherwise approved in writing by the Architect and the Roofing Manufacturer, incorporate flanged components into the system between roofing membrane and strip flashing. The flange shall be primed with a uniform coating of primer and allowed to dry. All flanges shall be set in mastic.

A. Metal Drip Strip: Completely prime metal flange and allow to dry prior to installation. After the base sheet and interply sheets have been installed, solidly mop strip flashing of sufficient width to extend completely under the flange and six (6) inches onto the roofing. Provide continuous cleat at drip strip where drip exceeds four (4) inches in height. Secure cleat to nailer with one and one-quarter (1-1/4) inch, stainless steel, ring-shanked roofing nails at twelve (12) inches on center. Set the drip strip flange in a troweling of mastic and stagger nail at three (3) inches on center with one and one-quarter (1-1/4) inch, stainless steel, ring-shanked roofing nails. Install in ten (10) foot lengths with six (6) inch laps. The interior of the metal shall be coated with mastic at laps. No two (2) laps closer than five (5) feet. Notch bottom and crimp top to lock laps. The roofing membrane shall then be applied, terminating at the gravel stop rise of the drip strip.

B. Metal Coping Cap: Attach continuous anchor plate to top of parapet in accordance with the Manufacturer's written instructions to comply with the Building Code and the Miami-Dade Notice of Acceptance. Snap coping onto anchor plate. Coping counterflashing to extend a minimum of four (4) inches below the anchorage at the top of the base flashing. Install in full twelve (12) foot lengths with concealed six (6) inch wide sealed splice plates. No two (2) splices closer than six (6) feet. No exposed fasteners.

C. Metal Counter flashing: Provide continuous bead of sealant in recess prior to attaching reglet in a uniform line at about ten (10) inches above the cant strip using factory supplied seven-eighths (7/8) inch stainless steel drive pins with neoprene washers. Snap counterflashing into reglet. Counter flashing to extend a minimum of four (4) inches below the anchorage at the top of the base flashing. Install in full ten (10) foot lengths with one (1) inch laps at reglet and four (4) inch mastic sealed laps at counterflashing. No two (2) laps closer than five (5) feet. Provide continuous bead of sealant along top edge between stucco and reglet. Installation to comply with the Building Code and the Miami-Dade Notice of Acceptance.

D. Lead Pipe Flashing: After the roofing membrane has been installed, embed the primed lead flanges in a full bed of mastic and roll lead flashing one (1) inch down into pipe. Top of all plumbing vents shall be a minimum of eight (8) inches above roofing membrane. Provide extensions as required. Strip in the flange with a flashing collar sufficiently wide enough to cover the entire flange width and to extend eight (8) inches past the edge of the flange onto the roofing membrane using mastic. A three-eighths (3/8) inch flow out of mastic is required. The roofing membrane shall terminate at the rise of the lead pipe flashing. Broadcast mineral granules over mastic flow out on the roofing membrane surface to ensure a monolithic surface color. With a cant of mastic, seal flashing collar around lead pipe flashing.

E. Roofing Penetration Flashing:

1. Connected Roofing Penetration Item: After the roofing membrane has been installed, mate shop fabricated half sections of base sleeve together around penetrating item and solder vertical and horizontal seams watertight. Embed the primed flashing flange in a full bed of mastic. Using mastic, strip in the flange with a flashing collar sufficiently wide and long enough to cover the entire flange and to extend eight (8) inches past the edge of the flange onto the roofing membrane. A three-eighths (3/8) inch flow out of mastic is required. The flashing collar shall terminate at the rise of the base sleeve. Broadcast mineral granules over mastic flow out on the roofing membrane surface to ensure a monolithic surface color. With a cant of mastic, seal flashing collar around base sleeve. Using a solvent with a rapid evaporation rate and leaving no residue, clean area of penetrating item directly above base sleeve. Wrap a single layer of one-quarter (1/4) inch to three-eighths (3/8) inch by one (1) inch wide closed cell foam tape around penetrating item one-quarter (1/4) inch above top of base sleeve. Wrap counterflashing around base sleeve one-quarter (1/4) inch above top of tape and solder vertical seam watertight. Apply sealant into channel and tool for positive runoff. Apply sealant cover directly above sealant.
2. Disconnected and/or New Roofing Penetration Item: After the roofing membrane has been installed, slide the flashing unit over the penetrating item. Embed the primed flashing flange in a full bed of mastic. Using mastic, strip in

the flange with a flashing collar sufficiently wide and long enough to cover the entire flange and to extend eight (8) inches past the edge of the flange onto the roofing membrane. A three-eighths (3/8) inch flow out of mastic is required. The flashing collar shall terminate at the rise of the base sleeve. Broadcast mineral granules over mastic flow out on the roofing membrane surface to ensure a monolithic surface color. With a cant of mastic, seal flashing collar around base sleeve. Using a solvent with a rapid evaporation rate and leaving no residue, clean area of penetrating item directly above base sleeve. Wrap a single layer of one-quarter (1/4) inch to three-eighths (3/8) inch by one (1) inch wide closed cell foam tape around penetrating item one-quarter (1/4) inch above top of base sleeve. Wrap counterflashing around base sleeve one-quarter (1/4) inch above top of tape and solder vertical seam watertight. Apply sealant into channel and tool for positive runoff. Apply sealant cover directly above sealant.

F. Pipe Mounting Pedestal: Completely prime the metal flanges and allow to dry prior to installation. Space pedestals at a distance to prevent sagging of the pipe/conduit and to prevent the pipe/conduit from coming into contact with the roofing membrane. Set the flange in a troweling of mastic over completed roofing system. Install base flashing in accordance with specifications.

G. Pitch Pans: Pitch pans shall NOT be used in lieu of any other penetration flashing and if deemed absolutely necessary, shall require prior approval in writing by the City Architect and the Roofing Manufacturer.

H. Roof Drains: Completely prime the lead flashing and allow to dry prior to installation. After the base sheet and interply sheets have been installed, solidly mop flashing collar of sufficient width to extend completely under the lead flashing and six (6) inches onto the roofing. Set the lead flashing in a troweling of mastic. The roofing membrane shall then be applied, terminating at the inside edge of the roof drain clamping ring. Install new metal dome, screen ring, clamp ring and all other damaged, deteriorated or missing parts.

I. Traffic Walkway: Cut walkway plies into maximum ten (10) foot lengths if placing parallel to roof slope and three (3) foot lengths if placing perpendicular to roof slope. Allow plies to relax until flat. Use a spacing of eight (8) inches between walkways to allow for drainage. Install both the first ply of walkway to the roofing membrane and the second ply to the first ply in a solid mopping of hot asphalt applied at a rate of twenty five (25) pounds per square, plus or minus fifteen (15) percent. Apply both plies smoothly without wrinkles, creases or fish mouths.

J. Caulk all exposed finish ply edges at drip strips, vent stacks, and similar items with a smooth continuous bead of approved sealant.

3.5 FIELD QUALITY CONTROL AND INSPECTIONS

A. Site Condition: Leave all areas around job site free of debris, roofing materials, equipment and related items after completion of job.

B. Notification of Completion: Notify the Roofing Manufacturer by means of Manufacturer's printed Notification of Completion form of job completion in order to schedule a final inspection date.

C. Final Inspection:

1. Post-Installation Meeting: Hold a meeting at the completion of the project, attended by all parties that were present at the pre-job conference. The Contractor and the Roofing Manufacturer's Representative shall compile a punch list of items required for completion. Complete, sign and mail the punch list form to the Roofing Manufacturer's headquarters.
2. Drain Verification: At final inspection of all work, verify that all drains, scuppers, and similar items are functioning properly. Ensure that roof drains have adequate strainers.
3. Issuance of the Guarantee: Complete all post installation procedures and meet the Roofing Manufacturer's final endorsement of issuance of the specified guarantee.

END OF SECTION 075200

SECTION 075323
ETHYLENE-PROPYLENE-DIENE-MONOMER (EPDM) ROOFING

PART 1 - GENERAL

1.1 SUMMARY

A. This Section includes the installation of a mechanically fastened roofing membrane (EPDM) system including insulation board to the existing 'Zonolite' concrete deck system. The work includes removal of existing roofing membrane system down to the existing 'Zonolite' deck. Before removal of the existing PVC system, the contractor is to coordinate equipment reinstallation and provide new equipment curbs for equipment presently on blocks (per Florida Building Code requirements) for the existing equipment so that the integrity of the new EPDM roofing system is not compromised and all the roof manufacturer's recommendations are met. The contractor must have fully inspected the (2) roofing areas before beginning the work. The City of Fort Lauderdale will have the 'Zonolite' tested for asbestos before the re-roofing operations begin. The new EPDM roofing system consists of mechanically fastened EPDM membrane over acceptable substrate board as approved by the manufacturer and Architect.

B. Once the asbestos testing has been accomplished by the City of Fort Lauderdale and the area deemed safe, the contractor is to begin and perform a pullout test on the deck following the procedure as outlined by the selected and approved manufacturer. This is to determine that the capacity of the deck (Zonolite) and metal decking conforms to the manufacturer's minimum pull-out criteria. Based on this test the attachment spacing may be increased to provide additional pull-out capacity. Contractor to base this bid on the 9" fastener spacing criteria as indicated and any additional required fasteners will be handled through the change order process. The warranty is based on 100 MPH max wind gusts.

1.2 SUBMITTALS

A. Product Data: For each product indicated.

B. Shop Drawings: Include plans, elevations, sections, details, and attachments to other Work.

C. Samples: For each product included in membrane roofing system.

D. Research/evaluation reports.

E. Maintenance data.

1.3 QUALITY ASSURANCE

A. Installer Qualifications: A qualified firm that is approved, authorized, or licensed by roofing system manufacturer to install manufacturer's product and that is eligible to receive manufacturer's warranty. Contractor to have 10 years minimum experience installing EPDM systems.

B. Source Limitations: Obtain components for membrane roofing system approved by roofing membrane manufacturer.

C. Fire-Test-Response Characteristics: Provide membrane roofing materials with the fire-test-response characteristics indicated as determined by testing identical products per test method below by UL, FMG, or another testing and inspecting agency acceptable to authorities having jurisdiction.

1. Exterior Fire-Test Exposure: Class A; ASTM E 108, for application and roof slopes indicated.

D. Preinstallation Conference: Conduct conference at location to be determined.

E. Roofing and installation shall meet all Florida Building Code requirements for Category 2, exposure 'C', 140 MPH conditions. Warranty is based on 100 MPH maximum wind. The roof shall be certified to withstand the following pressures, calculated in accordance with **ASCE 7-02**: Field of roofs=-54.3 psf; Perimeter of roofs=-91.7 psf; Roof corners=137 psf.

F. The installation shall conform to FBC (latest edition) RAS, TAS standards for high wind velocity hurricane zones. Contractor shall secure all permitting and inspections.

1.4 PROJECT CONDITIONS

A. Weather Limitations: Proceed with installation only when existing and forecasted weather conditions permit roofing system to be installed according to manufacturer's written instructions and warranty requirements.

B. Schedule and execute work to prevent leaks and excessive traffic.

C. Contractor to be responsible for all sanitary accommodations for workers.

1.5 WARRANTY

A. Special Warranty: Manufacturer's standard form, without monetary limitation, in which manufacturer agrees to repair or replace components of membrane roofing system that fail in materials or workmanship within specified warranty period. Failure includes roof leaks.

1. Warranty Period: 15 years from date of Substantial Completion. Submit sample of warranty before work begins and (2) copies of warranty upon completion.

2. Submit letter of certification from manufacturer which certifies the roofing contractor is authorized to install the roof system.

PART 2 - PRODUCTS

2.1 EPDM ROOFING MEMBRANE

A. EPDM Roofing Membrane: ASTM D 4637, 60 mil, .060 inch, Type II, scrim or fabric internally reinforced uniform, flexible sheet made from EPDM, and as follows: 'Sure Seal' as manufactured by Carlisle. System shall have U.L. Class A rating:

1. Available Manufacturers: Subject to compliance with requirements, manufacturers offering products that may be incorporated into the Work include, but are not limited to, the manufacturers specified.
2. Manufacturers: Subject to compliance with requirements, provide products by the manufacturers specified.
   a. Carlisle SynTec Incorporated, 'Sure Seal' reinforced.

b. Celotex Corporation.
c. ERSystems.
d. Firestone Building Products Company.
e. GenFlex Roofing Systems.
f. International Diamond Systems.
g. Johns Manville International, Inc.
h. Mule-Hide Products Co., Inc.
i. Protective Coatings, Inc.
j. Roofing Products International, Inc.
k. Stafast Roofing Products.
l. Versico Inc.
m. 'GAF'.

3. Thickness: 60 mils, nominal.
4. Exposed Face Color: Black-on-black reinforced.

2.2 SUBSTRATE BOARDS

A. Substrate Board: 1" Polyisocyanurate only as approved by the roofing manufacturer.

B. Fasteners: Factory-coated steel fasteners and metal or plastic plates meeting corrosion-resistance provisions in FMG 4470, designed for fastening substrate panel to roof deck only as approved by the roofing manufacturer.

2.3 AUXILIARY MATERIALS

A. General: Auxiliary materials recommended by roofing system manufacturer for intended use and compatible with membrane roofing.

B. Sheet Flashing: 60-mil thick EPDM, partially cured or cured, according to application.

C. Bonding Adhesive: Manufacturer's standard bonding adhesive.

D. Seaming Material: Single-component butyl splicing adhesive and splice cleaner] or [Manufacturer's standard synthetic-rubber polymer primer and **3-inch- (75-mm-)** wide minimum, butyl splice tape with release film as approved by the roofing manufacturer.

E. Fasteners: Factory-coated steel fasteners and metal or plastic plates meeting corrosion-resistance provisions in FMG 4470, designed for fastening membrane to substrate, and acceptable to membrane roofing system manufacturer. Fastening shall be with 10' sheets and minimum 9" o.c., 6" at perimeter and corners or as approved by the manufacturer to meet warranty and pull-out requirements. Insulation board to be fastened with min. 3" FM approved plates.

F. Miscellaneous Accessories: Provide lap sealant, water cutoff mastic, metal termination bars, pourable sealers, preformed cone and vent sheet flashings, preformed inside and outside corner sheet flashings, T-joint covers, in-seam sealants, termination reglets, cover strips, and other accessories. All termination bars, edging and accessories as approved or provided by the manufacturer.

2.4 ROOF INSULATION

A. Provide 1” polyisocyanurate board mechanically fastened as determined by the manufacturer.

2.5 WALKWAYS

A. -Flexible Walkways: Factory-formed, nonporous, heavy-duty, solid-rubber, slip-resisting, surface-textured walkway pads or rolls, approximately 3/16 inch (5 mm) thick, and acceptable to membrane roofing system manufacturer.

PART 3 - EXECUTION

3.1 MECHANICALLY FASTENED ROOFING MEMBRANE INSTALLATION

A. Install mechanically fastened roofing membrane in conjunction with the polyisocyanurate board over area to receive roofing according to roofing system manufacturer's written instructions. Unroll roofing membrane and allow to relax ½ hour before installing.

B. Start installation of roofing membrane in presence of roofing system manufacturer's technical personnel.

C. Accurately align roofing membranes and maintain uniform side and end laps of minimum dimensions required by manufacturer. Stagger end laps.

D. Mechanically or adhesively fasten roofing membrane securely at terminations and perimeter of roofing.

E. Adhesive Seam Installation: Clean both faces of splice areas, apply splicing cement, and firmly roll side and end laps of overlapping roofing membranes according to manufacturer's written instructions to ensure a watertight seam installation. Apply lap sealant and seal exposed edges of roofing membrane terminations.

F. Tape Seam Installation: Clean and prime both faces of splice areas, apply splice tape, and firmly roll side and end laps of overlapping roofing membranes according to manufacturer's written instructions to ensure a watertight seam installation. Apply lap sealant and seal exposed edges of roofing membrane terminations.

G. Repair tears, voids, and lapped seams in roofing that does not meet requirements.

H. In-Splice Attachment: Secure one edge of roofing membrane using fastening plates or battens centered within membrane splice and mechanically fasten roofing membrane to roof deck. Field-splice seam.

I. Through-Membrane Attachment: Secure roofing membrane using fastening plates or battens and mechanically fasten roofing membrane to roof deck. Cover battens and fasteners with a continuous strip.

J. Protect job site and provide security. Buildings will be occupied during construction and contractor will be responsible for premises protection and safety.

3.2 SUBSTRATE BOARD

A. Install insulation board (1” polyisocyanurate) per manufacturer of roofing system requirements with long joints in continuous straight lines, perpendicular to roof slopes with end joints staggered between rows. Tightly butt substrate boards together.

1. Fasten insulation board to top flanges of steel deck to resist uplift pressure at corners, perimeter, and field of roof according to membrane roofing system manufacturers' written instructions.

3.3 BASE FLASHING INSTALLATION

A. Install sheet flashings and preformed flashing accessories and adhere to substrates according to membrane roofing system manufacturer's written instructions.

B. Apply bonding adhesive to substrate and underside of sheet flashing at required rate and allow to partially dry. Do not apply bonding adhesive to seam area of flashing.

C. Flash penetrations and field-formed inside and outside corners with cured or uncured sheet flashing.

D. Clean splice areas, apply splicing cement, and firmly roll side and end laps of overlapping sheets to ensure a watertight seam installation. Apply lap sealant and seal exposed edges of sheet flashing terminations.

E. Terminate and seal top of sheet flashings and mechanically anchor to substrate through termination bars`.

3.4 WALKWAY INSTALLATION

A. Flexible Walkways: Install walkway products in locations indicated. Adhere walkway products to substrate with compatible adhesive according to roofing system manufacturer's written instructions.

3.5 FIELD QUALITY CONTROL

A. Testing Agency: Owner will engage a qualified independent testing and inspecting agency to perform roof tests and inspections and to prepare test reports.
B. Final Roof Inspection: Arrange for roofing system manufacturer's technical personnel and Architect to inspect roofing installation on completion and submit report to Architect. All installations, systems and methods shall be approved by the manufacturer to maintain warranties.
C. Repair or remove and replace components of membrane roofing system where test results or inspections indicate that they do not comply with specified requirements.
D. When completion of flashings and terminations is not achieved by the end of the day, a daily seal must performed to temporarily close the membrane to prevent water infiltration. Use manufacturer’s approved methods.

END OF SECTION 075323

SECTION 075400
THERMOPLASTIC MEMBRANE ROOFING

PART 1 - GENERAL

1.1 SUMMARY

A. This Section includes fully adhered membrane white roofing system and fully adhered insulation to structural concrete deck. All LEED requirements and NOA's must be complied with to the satisfaction of the Architect.

1.2 PERFORMANCE REQUIREMENTS

A. Energy Performance: Provide roofing system with Solar Reflectance Index not less than 78 when calculated according to ASTM E 1980 based on testing identical products by a qualified testing agency. Insulation thickness must not be less than 4" Polyisocyanurate anywhere on the roof measured from the structural concrete base.

1.3 SUBMITTALS

A. Product Data: For each product indicated.

B. LEED Submittals:

1. Product Test Reports for Credit SS 7.2: For roof materials, documentation indicating that roof materials comply with Solar Reflectance Index 78 requirements.
2. Product Data for Credit EQ 4.1: For adhesives and sealants, including printed statement of VOC content.
3. MRc4 Recycled Content (LEED Form).
4. MRc5 Local and Regional Materials (LEED Form).

C. Shop Drawings: Include plans, elevations, sections, details, and attachments to other Work.

D. Samples: For each product included in membrane roofing system.

E. Research/evaluation reports.

F. Maintenance data.

1.4 QUALITY ASSURANCE

A. Installer Qualifications: A qualified installer, with a minimum of 5 years installing these products, approved by manufacturer to install manufacturer's products.

B. Source Limitations: Obtain components for membrane roofing system from or approved by roofing membrane manufacturer.

C. Installer must be capable of extending the Manufacturer's No Dollar Limit guarantee.

D. Fire-Test-Response Characteristics: Provide membrane roofing materials with the fire-test-response characteristics indicated as determined by testing identical products per test method below by UL, FMG, or another testing and inspecting agency acceptable to authorities having jurisdiction.

1. Exterior Fire-Test Exposure: Class A; ASTM E 108, for application and roof slopes indicated.

E. Preinstallation Conference: Conduct conference at location to be determined.

F. The installation shall conform to FBC (latest edition) RAS, TAS standards for high wind velocity hurricane zones. Contractor shall secure all permitting and inspections.

1.5 WARRANTY

A. Special Warranty: Manufacturer's standard form, without monetary limitation, in which manufacturer agrees to repair or replace components of membrane roofing system that fail in materials or workmanship within 20 years from date of Substantial Completion. Failure includes any roof leaks.

PART 2 - PRODUCTS

2.1 MANUFACTURERS

A. In other Part 2 articles where titles below introduce lists, the following requirements apply for product selection:

1. Available Manufacturers: Subject to compliance with requirements, manufacturers offering products that may be incorporated into the Work include, but are not limited to, the manufacturers specified.

2.2 THERMOPLASTIC POLYOLEFIN ROOFING MEMBRANE

A. Fabric-Reinforced Thermoplastic Polyolefin Sheet: Uniform, flexible sheet formed from a thermoplastic polyolefin, internally fabric or scrim reinforced, and as follows only if the required current NOA’s are available:

1. Available Manufacturers:

a. Carlisle SynTec Incorporated.
b. Firestone Building Products Company.
c. GAF Materials Corporation.
d. GenFlex Roofing Systems.
e. Mule Hide
f. Stevens Roofing Systems; Div. of JPS Elastomerics.
g. Versico Inc.

2. Thickness: 60 mils (1.5 mm), nominal.
3. Exposed Face Color: White must have verified LEED minimum SRI rating of 78 with documentation.
4. Physical Properties:

    a. Breaking Strength: 225 lbf (1 kN); ASTM D 751, grab method.
    b. Elongation at Break: 15 percent; ASTM D 751.
    c. Tearing Strength: 55 lbf (245 N) minimum; ASTM D 751, Procedure B.
    d. Brittleness Point: Minus 22 deg F (30 deg C).
    e. Ozone Resistance: No cracks after sample, wrapped around a 3-inch- (75-mm-) diameter mandrel, is exposed for 166 hours to a temperature of 104 deg F (40 deg C) and an ozone level of 100 pphm (100 mPa); ASTM D 1149.
    f. Resistance to Heat Aging: 90 percent minimum retention of breaking strength, elongation at break, and tearing strength after 166 hours at 240 deg F (116 deg C); ASTM D 573.
    g. Water Absorption: Less than 4 percent mass change after 166 hours' immersion at 158 deg F (70 deg C); ASTM D 471.
    h. Linear Dimension Change: Plus or minus 2 percent; ASTM D 1204.
    i. Carlisle SynTec Sure-Weld Thermoplastic Polyolefin Membrane:
    j. Color: White.
    k. Membrane Thickness: 60 mil nominal.
    l. Thickness over Scrim: 0.020 inches (0.508mm) +/-10%.
    m. Field Sheet Dimensions:
        Width: 10 feet (3.05 m) maximum.
        Length: 100 feet (30.5 m) maximum.

2.3 AUXILIARY MATERIALS

A. General: Auxiliary materials recommended by roofing system manufacturer for intended use and compatible with membrane roofing.

1. Adhesives and sealants that are used inside of the weatherproofing system shall comply with the following limits for VOC content when calculated according to 40 CFR 59, Subpart D (EPA Method 24): The adhesives used shall be approved by the manufacturer and be compatible with the approved NOA.

    a. Plastic Foam Adhesives: 50 g/L.
    b. Gypsum Board and Panel Adhesives: 50 g/L.
    c. Multipurpose Construction Adhesives: 70 g/L.
    d. Fiberglass Adhesives: 80 g/L.
    e. Contact Adhesives: 80 g/L.
    f. Plastic Cement Welding Compounds: 350 g/L.
    g. PVC Welding Compounds: 510 g/L.
    h. Other Adhesives: 250 g/L.
    i. Single-Ply Roof Membrane Sealants: 450 g/L.
    j. Nonmembrane Roof Sealants: 300 g/L.
    k. Sealant Primers for Nonporous Substrates: 250 g/L.
    l. Sealant Primers for Porous Substrates: 775 g/L.

B. Sheet Flashing: Manufacturer's standard sheet flashing of same material, type, reinforcement, thickness, and color as TPO sheet membrane. Provide a waterproof, fully adhered base flashing system at all penetrations, plane transitions and terminations 60 Mils thick, as approved by the Manufacturer to maintain warranties.

C. Bonding Adhesive: Manufacturer's standard solvent water-based bonding adhesive for membrane, and solvent-based bonding adhesive for base flashings.

D. Metal Termination Bars: Manufacturer's standard predrilled stainless-steel or aluminum bars, approximately 1 by 1/8 inch (25 by 3 mm) thick; with anchors.

E. Metal Battens: Manufacturer's standard aluminum-zinc-alloy-coated or zinc-coated steel sheet, approximately 1 inch (25 mm) wide by 0.05 inch (1.3 mm) thick, prepunched.

F. Miscellaneous Accessories: Provide pourable sealers, preformed cone and vent sheet flashings, preformed inside and outside corner sheet flashings, T-joint covers, termination reglets, cover strips, slip sheet, and other accessories.

2.4 ROOF INSULATION

A. Polyisocyanurate Board Insulation: ASTM C 1289, Type II, felt or glass-fiber mat facer on both major surfaces as approved by the manufacturer and to conform to NOA.

B. Provide preformed saddles, crickets, tapered edge strips, and other insulation shapes where indicated for sloping to drain. Fabricate to slopes indicated.

2.5 WALKWAYS

A. Flexible Walkways: Factory-formed, nonporous, heavy-duty, solid-rubber, slip-resisting, surface-textured walkway pads or rolls, approximately 3/16 inch (5 mm) thick, and acceptable to membrane roofing system manufacturer. Walkway material shall be heat welded to TPO membrane using an automated heat welder or hand held heat welder. Walkway Rolls are 34 inches (864mm) wide by 50 feet (15.2 M) long and are nominal 120 mils thick. Color - White

PART 3 - EXECUTION

3.1 INSULATION INSTALLATION

A. Coordinate installing membrane roofing system components so insulation is not exposed to precipitation or left exposed at the end of the workday.

B. Comply with membrane roofing system manufacturer's written instructions for installing roof insulation.

C. Install one or more layers of insulation under area of roofing to achieve required thickness. Where overall insulation thickness is 2 inches (50 mm) or greater, install 2 or more layers with joints of each succeeding layer staggered from joints of previous layer a minimum of 6 inches (150 mm) in each direction.

D. Adhered Insulation: Install each layer of insulation and adhere to substrate as follows:

1. Prime surface of concrete deck with asphalt primer at a rate of 3/4 gal./100 sq. ft. (0.3 L/sq. m) and allow primer to dry.
2. Set each layer of insulation in a solid mopping of hot roofing asphalt, applied within plus or minus 25 deg F (14 deg C) of equiviscous temperature.
3. Set each layer of insulation in a cold fluid-applied adhesive.

3.2 ADHERED ROOFING MEMBRANE INSTALLATION

A. Install roofing membrane over area to receive roofing according to membrane roofing system manufacturer's written instructions. Unroll roofing membrane and allow to relax before installing.

1. Install sheet according to ASTM D 5036.

B. Bonding Adhesive: Apply low VOC solvent-based bonding adhesive to substrate and underside of roofing membrane at rate required by manufacturer and allow to partially dry before installing roofing membrane. Do not apply bonding adhesive to splice area of roofing membrane.

C. Bonding Adhesive: Apply water-based bonding adhesive to substrate at rate required by manufacturer and immediately install roofing membrane. Do not apply bonding adhesive to splice area of roofing membrane.

D. Seams: Clean seam areas, overlap roofing membrane, and hot-air weld side and end laps of roofing membrane according to manufacturer's written instructions to ensure a watertight seam installation.

1. Repair tears, voids, and lapped seams in roofing membrane that does not meet requirements.

3.3 BASE FLASHING INSTALLATION

A. Install sheet flashings and preformed flashing accessories and adhere to substrates according to membrane roofing system manufacturer's written instructions.

B. Apply solvent-based bonding adhesive to substrate and underside of sheet flashing at required rate and allow to partially dry. Do not apply bonding adhesive to seam area of flashing.

C. Flash penetrations and field-formed inside and outside corners with sheet flashing.

D. Clean seam areas and overlap and firmly roll sheet flashings into the adhesive. Weld side and end laps to ensure a watertight seam installation.

E. Terminate and seal top of sheet flashings[and mechanically anchor to substrate through termination bars].

3.4 WALKWAY INSTALLATION

A. Flexible Walkways: Install walkway products in locations indicated. Heat weld walkway products to substrate according to roofing system manufacturer's written instructions.

3.5 FIELD QUALITY CONTROL

A. Testing Agency: Owner will engage a qualified independent testing and inspecting agency to perform roof tests and inspections and to prepare test reports.

B. Final Roof Inspection: Arrange for roofing system manufacturer's technical personnel to inspect roofing installation on completion and submit report to Architect.

C. Repair or remove and replace components of membrane roofing system where test results or inspections indicate that they do not comply with specified requirements.

D. All installations and details shall be approved by the manufacturer before installation. Any details not conforming to specific Manufacturer’s criteria including warranty and NOA criteria shall be replaced by the contractor at no cost to the owner even if the drawing details show contrary methods. The actual manufacturer shall dictate all specifics and technical criteria and the details shown on the drawings are meant to show design intent and not specifics as to any single or particular manufacturer. However, where the Roof Details show a greater method of protection than the minimum requirements of the selected manufacturer then the contractor shall provide that more stringent or greater protection method according to the final opinion and decision of the Architect.

END OF SECTION 075400

SECTION 076100
SHEET METAL ROOFING

PART 1 - GENERAL

1.1 SUMMARY

A. This Section includes the following manufactured, custom-fabricated or on-site, roll-formed sheet metal roofing:

1. Standing-seam metal roofing.
2. Flat seam Gazebo roofing.
3. Copper Metal Shingles at Gazebo structures.

1.2 PERFORMANCE REQUIREMENTS

A. Wind-Uplift Resistance: Capable of resisting a design negative uplift pressure as indicated on Drawings. Provide clips, fasteners, and clip spacings of type indicated and with capability to sustain, without failure, a load equal to 3 times the design negative uplift pressure.

B. Wind-Uplift Resistance: Capable of producing sheet metal roofing assemblies that comply with UL 580 for Class 90 wind-uplift resistance. Conform to the Florida Building Code wind pressure requirements.

1. Maintain UL certification of portable roll-forming equipment for duration of sheet metal roofing work.

1.3 SUBMITTALS

A. Product Data: For each type of underlayment product indicated.

B. Shop Drawings: Show layouts of sheet metal roofing, including plans, elevations, and keyed references to termination points.

1. Include details for forming, joining, and securing sheet metal roofing, including pattern of seams, termination points, expansion joints, roof penetrations, edge conditions, special conditions, connections to adjoining work, and accessory items.

C. Samples: For each exposed finish.

D. Roll-Forming Equipment Certificate: Issued by UL.

E. Product test reports.

1.4 QUALITY ASSURANCE

A. Installer Qualifications: Fabricator of sheet metal roofing.

B. Custom-Fabricated Sheet Metal Roofing Fabricator Qualifications: Shop that employs skilled workers who custom-fabricate sheet metal roofing.

C. Roll-Formed Sheet Metal Roofing Fabricator Qualifications: An authorized representative of roll-formed sheet metal roofing manufacturer for fabrication and installation of units.

D. Sheet Metal Roofing Standard: Comply with SMACNA's "Architectural Sheet Metal Manual."

E. Copper Roofing Standard: Comply with CDA's "Copper in Architecture Handbook."

1. Substantial Completion.

F. Preinstallation Conference: Conduct conference at location to be determined at contract award.

G. The installation shall conform to FBC (latest edition) RAS, TAS standards for high wind velocity hurricane zones. Contractor shall secure all permitting and inspections.

1.5 WARRANTY

A. Special Warranty on Finishes: Manufacturer's standard form in which manufacturer agrees to repair finish or replace sheet metal roofing that shows evidence of deterioration of factory-applied finishes within specified warranty period.

1. Siliconized Polyester Finish Warranty Period: 10 years from date of Substantial Completion.
2. Fluoropolymer Finish Warranty Period: 20 years from date of Substantial Completion.

B. Special Installer's Warranty: Specified form in which Roofing Installer agrees to repair or replace components of custom-fabricated sheet metal roofing that fail in materials or workmanship within two years from date of Substantial Completion.

PART 2 - PRODUCTS

2.1 ROOFING SHEET METALS

A. Metallic-Coated Steel Sheet Prepainted with Coil Coating: Steel sheet metallic coated by the hot-dip process and prepainted by the coil-coating process to comply with ASTM A 755/A 755M.

1. Zinc-Coated (Galvanized) Steel Sheet: ASTM A 653/A 653M, G90(Z275) coating designation; structural quality.
2. Aluminum-Zinc Alloy-Coated Steel Sheet: ASTM A 792/A 792M, Class AZ50 coating designation, Grade 40(Class AZM150 coating designation, Grade 275); structural quality.
3. Surface: Smooth, flat finish.
4. Thickness: 0.0276 inch(0.7 mm), unless otherwise indicated.
5. Exposed Finishes:

a. Siliconized-Polyester Coating: Dry film thickness of not less than 0.2 mil(0.005 mm) for epoxy primer and 0.8 mil(0.02 mm) for topcoat.

1) Color: Match Architect's samples or to match existing for repair.

b. High-Performance Organic Finish: Three-coat thermocured system with fluoropolymer coats containing not less than 70 percent polyvinylidene fluoride resin by weight; complying with physical properties and coating performance requirements of AAMA 2605, except as modified below:

1) Humidity Resistance: 2000 hours.
2) Salt-Spray Resistance: 2000 hours.
3) Color: As selected by Architect from manufacturer's full range or to match existing conditions where repair..

c. Factory Prime Coating: White or light-colored, factory-applied, baked-on epoxy primer coat.

B. Aluminum Sheet: Coil-coated sheet, ASTM B 209(ASTM B 209M), alloy as standard with manufacturer, with temper as required to suit forming operations and structural performance required.

1. Surface: Smooth, flat finish.
2. Thickness: 0.040 inch(1.0 mm), unless otherwise indicated.
3. Exposed Finishes:

a. Siliconized-Polyester Coating: Dry film thickness of not less than 0.2 mil(0.005 mm) for epoxy primer and 0.8 mil(0.02 mm) for topcoat.
1) Color: Match Architect's samples or match existing conditions.

b. High-Performance Organic Finish: Three-coat thermocured system with fluoropolymer coats containing not less than 70 percent polyvinylidene fluoride resin by weight; complying with AAMA 2605.
1) Color: Match Architect's samples or match existing as required.

c. Factory Prime Coating: White or light-colored, factory-applied, baked-on epoxy primer coat.

C. Copper Roofing Tiles: ASTM B 370, cold-rolled copper sheet, H00 temper, unless otherwise indicated.
1. Panel/Tile dimension to match existing panel / tile dimension and style / manufacturer, Solid copper by "Berridge", "Victorian" Manufacturing Co. (or match existing) to match existing tile finishes.

2.2 UNDERLAYMENT MATERIALS

A. Polyethylene Sheet: 6-mil-(0.15-mm-) thick polyethylene sheet complying with ASTM D 4397.

B. Felts: ASTM D 226, Type II (No. 30), asphalt-saturated organic felts.

C. Self-Adhering, Granular-Faced Sheet: ASTM D 1970, 55 mils(1.4 mm) thick minimum, consisting of glass-fiber-mat reinforcing and SBS-modified asphalt, granule faced, with release- paper backing; cold applied. Provide primer when recommended by underlayment manufacturer.

D. Self-Adhering, Polyethylene-Faced Sheet: ASTM D 1970, 40 mils(1.0 mm) thick minimum, consisting of slip-resisting polyethylene-film reinforcing and top surface laminated to SBS-modified asphalt adhesive, with release-paper backing; cold applied.

2.3 MISCELLANEOUS MATERIALS

A. Fasteners: Self-tapping screws, self-locking rivets and bolts, and other suitable fasteners designed to withstand design loads.

1. Nails for Copper Roofing: Copper, hardware bronze, or Series 300 stainless steel, 0.109 inch(2.8 mm) minimum and not less than 7/8 inch(22 mm) long, barbed with large head.
2. Exposed Fasteners: Heads matching color of sheet metal roofing by means of plastic caps or factory-applied coating.
3. Fasteners for Flashing and Trim: Blind fasteners or self-drilling screws with hex washer head.
4. Blind Fasteners: High-strength aluminum or stainless-steel rivets.

B. Sealing Tape: Pressure-sensitive, 100 percent solids, polyisobutylene compound sealing tape with release-paper backing. Provide permanently elastic, nonsag, nontoxic, nonstaining tape.

C. Elastomeric Joint Sealant: ASTM C 920, of base polymer, type, grade, class, and use classifications required to produce joints in sheet metal roofing that will remain weathertight.

D. Expansion-Joint Sealant: For hooked-type expansion joints, which must be free to move, provide nonsetting, nonhardening, nonmigrating, heavy-bodied polyisobutylene sealant.
Bituminous Coating: Cold-applied asphalt mastic, SSPC-Paint 12, compounded for 15-mil(0.4-mm) dry film thickness per coat.

2.4 ACCESSORIES

A. Sheet Metal Roofing Accessories: Provide components required for a complete sheet metal roofing assembly including trim, copings, fasciae, corner units, ridge closures, clips, flashings, sealants, gaskets, fillers, closure strips, and similar items. Match material and finish of sheet metal roofing, unless otherwise indicated.

1. Clips: Minimum 0.0625-inch-(1.6-mm-) thick, stainless-steel panel clips designed to withstand negative-load requirements.
2. Cleats: Mechanically seamed cleats formed from the following material:
   a. Metallic-Coated Steel Roofing: 0.0250-inch-(0.65-mm-) thick, stainless-steel or nylon-coated aluminum sheet.
3. Closures: Closed-cell, expanded, cellular, rubber or crosslinked, polyolefin-foam or closed-cell laminated polyethylene; minimum 1-inch-(25-mm-) thick, flexible closure strips; cut or premolded to match sheet metal roofing profile. Provide closure strips where indicated or necessary to ensure weathertight construction.

B. Flashing and Trim: Formed from 0.0179-inch-(0.45-mm-) thick, metallic-coated steel sheet. Provide flashing and trim as required to seal against weather and to provide finished appearance. Locations include, but are not limited to, eaves, rakes, corners, bases, framed openings, ridges, fasciae, and fillers. Finish flashing and trim with same finish system as adjacent sheet metal roofing.

C. Gutters: Formed from 0.0179-inch-(0.45-mm-) thick, metallic-coated steel sheet. Match profile of gable trim, complete with end pieces, outlet tubes, and other special pieces as required. Fabricate in minimum 96-inch-(2400-mm-) long sections, sized according to SMACNA's "Architectural Sheet Metal Manual." Furnish gutter supports spaced 36 inches(900 mm) o.c., fabricated from same metal as gutters. Provide bronze, copper, or aluminum wire ball strainers at outlets. Finish gutters to match roof fascia and rake trim.

D. Downspouts: Formed from 0.0179-inch-(0.45-mm-) thick, metallic-coated steel sheet; in 10-foot-(3-m-) long sections, complete with formed elbows and offsets. Finish downspouts to match sheet metal roofing.

2.5 EQUIPMENT

A. Portable Roll-Forming Equipment: Manufacturer's standard UL-certified equipment capable of forming sheet metal roofing in profiles indicated.

1. Available Manufacturers: Subject to compliance with requirements, manufacturers offering products that may be incorporated into the Work include, but are not limited to, the following:

2. Manufacturers: Subject to compliance with requirements, provide products by one of the following:

   a. Berridge Manufacturing Company.
   b. Fabral, Inc.
   c. Flexospan Steel Buildings, Inc.
   d. Metal-Fab Manufacturing, LLC.
   e. Morin Corporation; a Metecno Group Company.

2.6 FABRICATION

A. General: Custom fabricate sheet metal roofing to comply with details shown and recommendations in SMACNA's "Architectural Sheet Metal Manual" that apply to the design, dimensions (pan width and seam height), geometry, metal thickness, and other characteristics of installation indicated. Fabricate sheet metal roofing and accessories at the shop to greatest extent possible.

1. Standing-Seam Roofing: Form standing-seam pans with finished seam height of 1-1/2 inches(38 mm) or as indicated.

B. General: Fabricate roll-formed sheet metal roofing panels to comply with details shown and roll-formed sheet metal roofing manufacturer's written instructions.

C. Fabricate sheet metal roofing to allow for expansion in running work sufficient to prevent leakage, damage, and deterioration of the Work. Form exposed sheet metal work to fit substrates without excessive oil canning, buckling, and tool marks, true to line and levels indicated, and with exposed edges folded back to form hems.

1. Lay out sheet metal roofing so cross seams, when required, are made in direction of flow with higher pans overlapping lower pans. Stagger cross seams.
2. Fold and cleat eaves and transverse seams in the shop.
3. Form and fabricate sheets, seams, strips, cleats, valleys, ridges, edge treatments, integral flashings, and other components of metal roofing to profiles, patterns, and drainage arrangements shown and as required for leakproof construction.

D. Metal Protection: Where dissimilar metals will contact each other, protect against galvanic action by painting contact surfaces with bituminous coating, by applying rubberized-asphalt

underlayment to each contact surface, or by other permanent separation as recommended by manufacturers of dissimilar metals or by fabricator.

E. Sheet Metal Accessories: Custom fabricate flashings and trim to comply with recommendations in SMACNA's "Architectural Sheet Metal Manual" that apply to design, dimensions, metal, and other characteristics of item indicated. Obtain field measurements for accurate fit before shop fabrication.

2.7 FINISHES

A. Copper Shingle Finishes: Mill Brushed satin, CDA M32-06x; clear organic coating as to match existing shingle finish conditions.

1. Clear, Organic Coating: Clear, air-drying, acrylic lacquer; total thickness of 1 mil(0.025 mm) or as per manufacturer of existing roof.

PART 3 - EXECUTION

3.1 PREPARATION

A. Install flashings and other sheet metal to comply with requirements specified in Division 07 Section "Sheet Metal Flashing and Trim."

3.2 UNDERLAYMENT INSTALLATION

A. Polyethylene Sheet Underlayment: Install polyethylene sheet on roof sheathing under sheet metal roofing. Use adhesive for anchorage. Apply at locations indicated on Drawings or existing conditions, in shingle fashion to shed water, with lapped and taped joints of not less than 2 inches(50 mm).

B. Felt Underlayment: Install felt underlayment and building-paper slip sheet on roof sheathing under sheet metal roofing. Use adhesive for temporary anchorage. Apply at locations indicated on Drawings or existing conditions, in shingle fashion to shed water, with lapped joints of not less than 2 inches(50 mm).

C. Self-Adhering Sheet Underlayment: Install self-adhering sheet underlayment, wrinkle free, on roof sheathing under sheet metal roofing. Comply with temperature restrictions of underlayment manufacturer for installation; use primer rather than nails for installing underlayment at low temperatures. Apply over entire roof at locations indicated on Drawings, in shingle fashion to shed water, with end laps of not less than 6 inches(150 mm) staggered 24 inches(600 mm) between courses. Overlap side edges not less than 3-1/2 inches(90 mm). Extend underlayment into gutter trough. Roll laps with roller. Cover underlayment within 14 days.

D. Apply slip sheet over underlayment before installing sheet metal roofing.

3.3 INSTALLATION, GENERAL

A. General: Install sheet metal roofing perpendicular to purlins or supports. Anchor sheet metal roofing and other components of the Work securely in place, with provisions for thermal and structural movement. Install fasteners, solder, welding rods, protective coatings, separators,

sealants, and other miscellaneous items as required for a complete roofing system and as recommended by fabricator for sheet metal roofing.

1. Field cutting of sheet metal roofing by torch is not permitted.
2. Rigidly fasten eave end of sheet metal roofing and allow ridge end free movement due to thermal expansion and contraction. Predrill roofing.
3. Provide metal closures at peaks rake edges rake walls and each side of ridge and hip caps.
4. Flash and seal sheet metal roofing with weather closures at eaves, rakes, and at perimeter of all openings. Fasten with self-tapping screws.
5. Locate roofing splices over, but not attached to, structural supports. Stagger roofing splices and end laps to avoid a four-panel lap splice condition.
6. Lap metal flashing over sheet metal roofing to allow moisture to run over and off the material.

B. Fasteners: Use fasteners of sizes that will not penetrate completely through substrate.

1. Steel Roofing: Use stainless-steel fasteners.
2. Aluminum Roofing: Use aluminum or stainless-steel fasteners.
3. Copper Roofing: Use copper, hardware bronze, or stainless-steel fasteners.

C. Metal Protection: Where dissimilar metals will contact each other or corrosive substrates, protect against galvanic action by painting contact surfaces with bituminous coating, by applying rubberized-asphalt underlayment to each contact surface, or by other permanent separation as recommended by fabricator of sheet metal roofing or manufacturers of dissimilar metals.

1. Coat back side of uncoated aluminum and sheet metal roofing with bituminous coating where roofing will contact wood, ferrous metal, or cementitious construction.

D. Conceal fasteners and expansion provisions where possible in exposed work and locate to minimize possibility of leakage. Cover and seal fasteners and anchors as required for a tight installation.

3.4 CUSTOM-FABRICATED SHEET METAL ROOFING INSTALLATION

A. Fabricate and install work with lines and corners of exposed units true and accurate. Form exposed faces flat and free of buckles, excessive waves, and avoidable tool marks, considering temper and reflectivity of metal. Provide uniform, neat seams with minimum exposure of solder, welds, and sealant. Fold back sheet metal to form a hem on concealed side of exposed edges, unless otherwise indicated.

1. Install cleats to hold sheet metal panels in position. Attach each cleat with two fasteners to prevent rotation.
2. Nail cleats not more than 12 inches(300 mm) o.c. Bend tabs over nails.

B. Seal joints as shown and as required for leakproof construction. Provide low-slope transverse seams using cleats where backup of moisture may occur.

1. Prepare joints and apply sealants to comply with requirements in Division 07 Section "Joint Sealants."

C. Soldered Joints: Clean surfaces to be soldered, removing oils and foreign matter. Pretin edges of sheets to be soldered to a width of 1-1/2 inches(38 mm), except where pretinned surface would show in finished Work.

1. Do not solder metallic-coated steel and aluminum sheet.
2. Do not use torches for soldering. Heat surfaces to receive solder and flow solder into joint. Fill joint completely. Completely remove flux and spatter from exposed surfaces.

D. Provide expansion cleats in roof panels that exceed 30 feet(9.1 m) in length.

E. Aluminum Roofing: Rivet joints in uncoated aluminum where necessary for strength.

F. Standing-Seam Roofing: Attach standing-seam metal pans to substrate with cleats, double-nailed at 12 inches(305 mm) o.c. Install pans reaching from eave to ridge before moving to adjacent pans. Lock each pan to pan below with transverse seam. Before pans are locked, apply continuous bead of sealant to top flange of lower pan. Crimp standing seams by folding over twice so cleat and pan edges are completely engaged.

1. Loose-lock pans at eave edges to continuous cleats and flanges on back edges of gutters.
2. Fold over seams after crimping at ridges and hips or match existing conditions.

3.5 ON-SITE, ROLL-FORMED SHEET METAL ROOFING INSTALLATION

A. General: Install on-site, roll-formed sheet metal roofing to comply with sheet metal roofing manufacturer's written instructions for UL wind-uplift class indicated. Provide sheet metal roofing of full length from eave to ridge unless otherwise restricted by shipping limitations.

B. Standing-Seam Sheet Metal Roofing: Fasten sheet metal roofing to supports with concealed clips at each standing-seam joint at location, spacing, and with fasteners recommended by manufacturer.

1. Install clips to supports with self-tapping fasteners.
2. Before panels are joined, apply continuous bead of sealant to top flange of lower panel.
3. Snap Joint: Nest standing seams and fasten together by interlocking and completely engaging field-applied sealant.
4. Seamed Joint: Crimp standing seams with manufacturer-approved motorized seamer tool so cleat, sheet metal roofing, and field-applied sealant are completely engaged.

3.6 ACCESSORY INSTALLATION

A. General: Install accessories with positive anchorage to building and weathertight mounting and provide for thermal expansion. Coordinate installation with flashings and other components.

1. Install components required for a complete sheet metal roofing assembly including trim, copings, ridge closures, seam covers, flashings, sealants, gaskets, fillers, closure strips, and similar items.
2. Comply with performance requirements, manufacturer's written installation instructions, and SMACNA's "Architectural Sheet Metal Manual." Provide concealed fasteners where possible, and set units true to line and level as indicated. Install work with laps, joints, and seams that will be permanently watertight and weather resistant.

3. Provide elbows at base of downspout to direct water away from building.
4. Tie downspouts to underground drainage system indicated.

3.7 CLEANING AND PROTECTION

A. Remove temporary protective coverings and strippable films, if any, as sheet metal roofing is installed. On completion of sheet metal roofing installation, clean finished surfaces, including removing unused fasteners, metal filings, pop rivet stems, and pieces of flashing. Maintain in a clean condition during construction.

END OF SECTION 076100

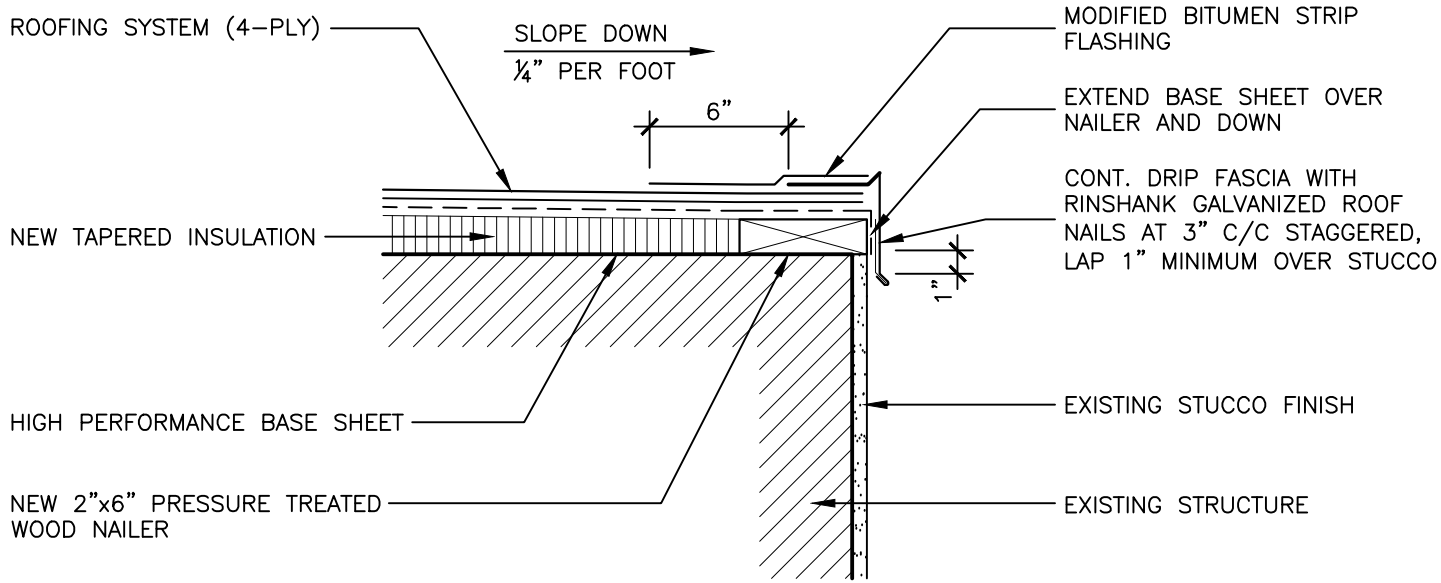

BID

130625

SHEET NO. R-1 OF 42	PROJECT # 11926 ROOFING CITY WIDE ROOF EDGE DETAIL WITHOUT FASCIA	REVISIONS	CITY OF FORT LAUDERDALE PUBLIC WORKS DEPARTMENT ENGINEERING & ARCHITECTURE 100 North Andrews Avenue, Fort Lauderdale, Florida 33301
TOTAL:			DRAWN BY: RD — DATE: 6/25/13
CAD FILE: 11926-R01-ROOF			DESIGNED BY: RD — SCALE: NTS
DRAWING FILE NO. 4-137-52			CHECKED BY: CS
			FIELD BOOK:

NO.	DATE	BY	CHK'D	DESCRIPTION

City of Fort Lauderdale

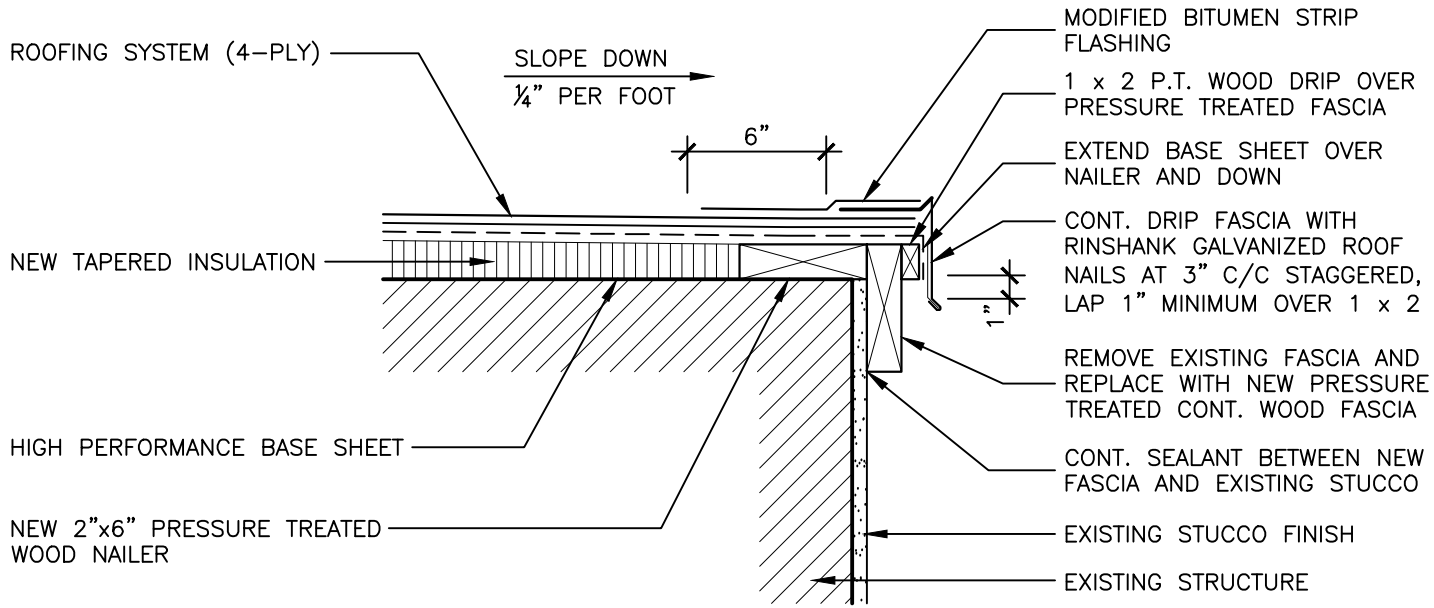

BID

130625

SHEET NO.	R-2
OF	42
TOTAL:	
CAD FILE:	11926-R02-ROOF
DRAWING FILE NO.	4-137-52

PROJECT # 11926
ROOFING CITY WIDE

ROOF EDGE DETAIL WITH FASCIA

REVISIONS

NO.	DATE	BY	CHK'D	DESCRIPTION

CITY OF FORT LAUDERDALE
PUBLIC WORKS DEPARTMENT
ENGINEERING & ARCHITECTURE
100 North Andrews Avenue, Fort Lauderdale, Florida 33301

DRAWN BY: RD	DATE: 6/25/13
DESIGNED BY: RD	SCALE: NTS
CHECKED BY: CS	
FIELD BOOK:	

City of Fort Lauderdale

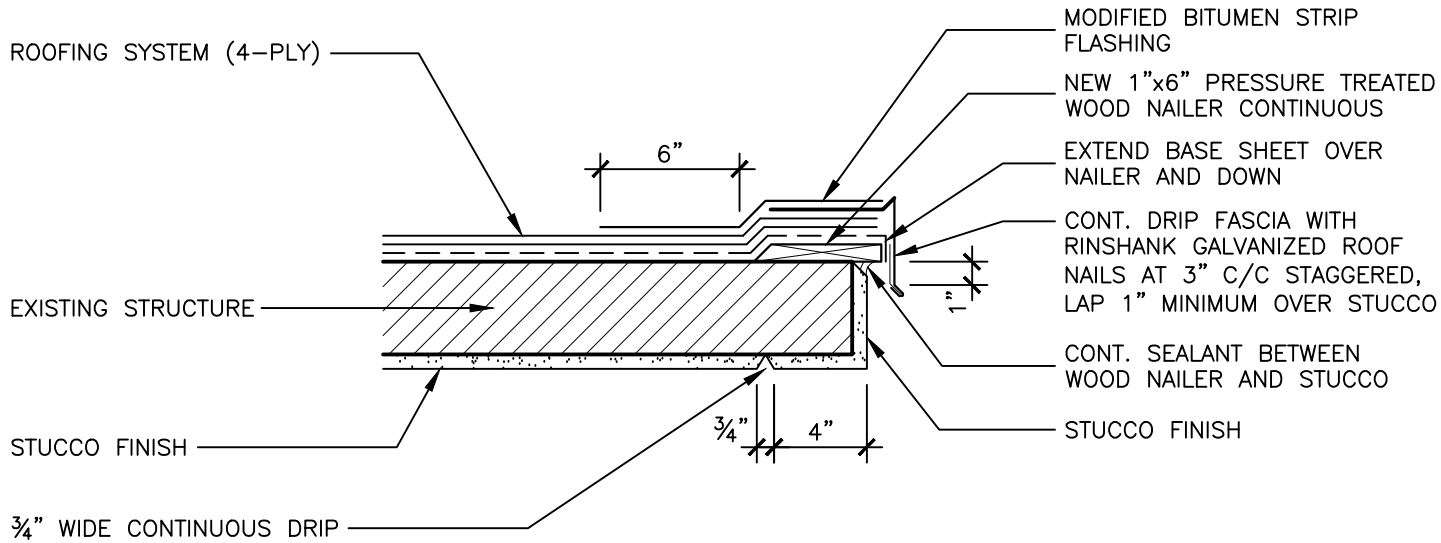

BID

130625

SHEET NO.	R-3
OF	42
TOTAL:	
CAD FILE:	11926-R03-ROOF
DRAWING FILE NO.	4-137-52

PROJECT # 11926
ROOFING CITY WIDE

ROOF EDGE DETAIL AT OVERHANG

REVISIONS

NO.	DATE	BY	CHK'D	DESCRIPTION

CITY OF FORT LAUDERDALE
PUBLIC WORKS DEPARTMENT
ENGINEERING & ARCHITECTURE
100 North Andrews Avenue, Fort Lauderdale, Florida 33301

DRAWN BY: RD	DATE: 6/25/13
DESIGNED BY: RD	SCALE: NTS
CHECKED BY: CS	
FIELD BOOK:	

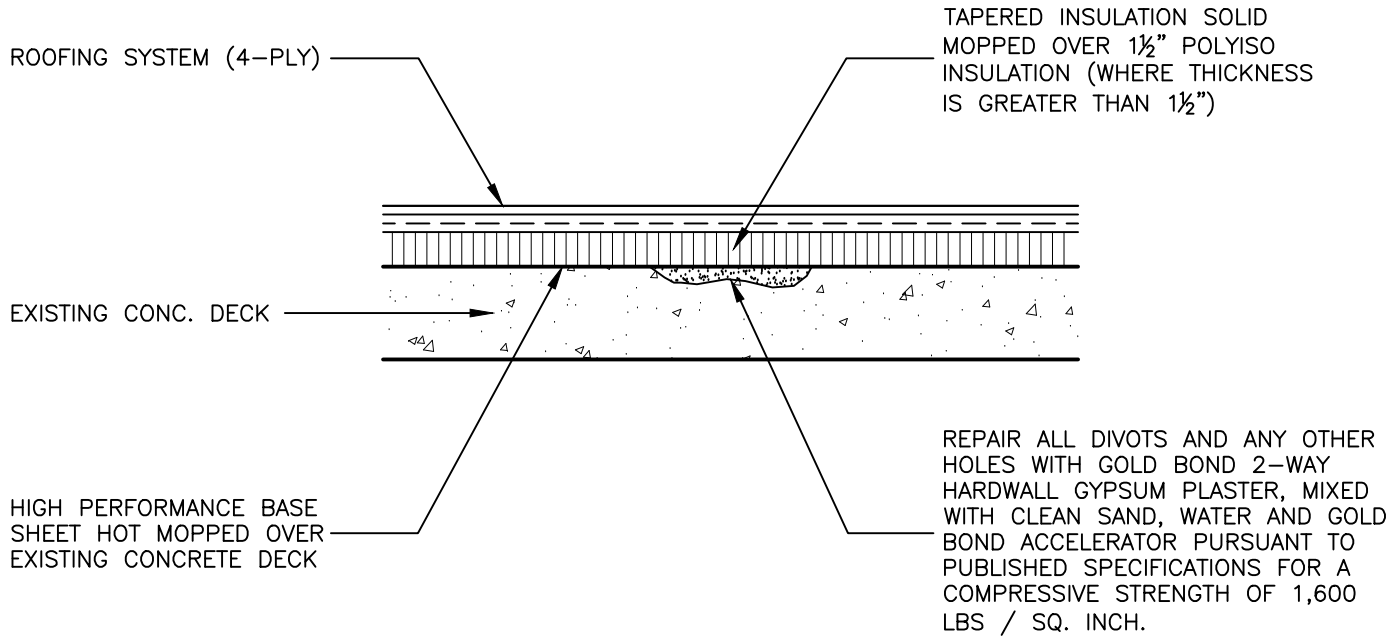

BID

130625

SHEET NO. R-4 OF 42	PROJECT # 11926 ROOFING CITY WIDE INSULATION TO ROOF DECK DETAIL	CITY OF FORT LAUDERDALE PUBLIC WORKS DEPARTMENT ENGINEERING & ARCHITECTURE 100 North Andrews Avenue, Fort Lauderdale, Florida 33301

TOTAL:
CAD FILE: 11926–R04–ROOF
DRAWING FILE NO. 4–137–52

REVISIONS

NO.	DATE	BY	CHK'D	DESCRIPTION

DRAWN BY: RD	DATE: 6/25/13
DESIGNED BY: RD	SCALE: NTS
CHECKED BY: CS	
FIELD BOOK:	

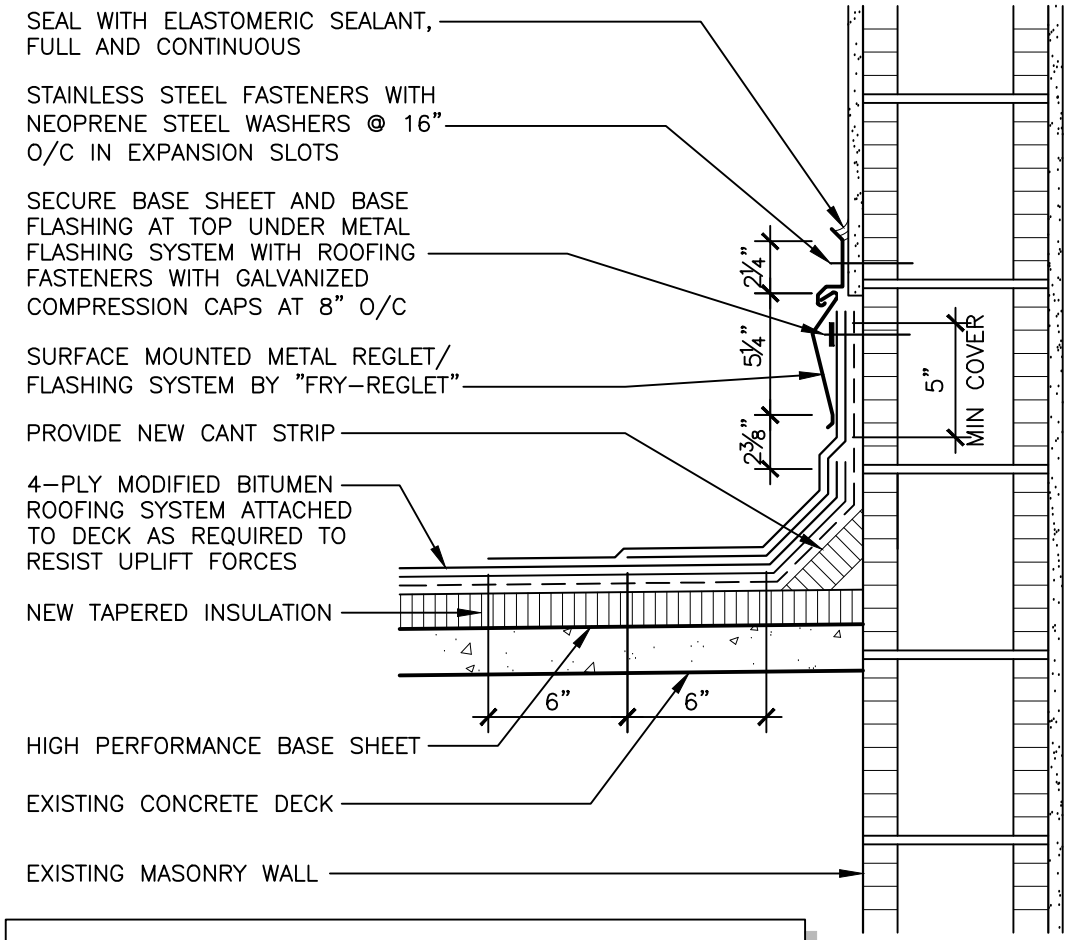

ALL REQUIRED ENGINEERING TO BE FURNISHED AND PAID FOR BY CONTRACTOR. PREPARE FOR, FURNISH AND INSTALL NEW INSULATION, CANTS, BASE SHEET, INTERPLY SHEET, MEMBRANE, AND ALL CAP FLASHING PERSUANT TO SPECS.

BID

130625

SHEET NO. R-5 OF 42	PROJECT # 11926 ROOFING CITY WIDE FLASHING DETAIL AT WALL OR COLUMN	CITY OF FORT LAUDERDALE PUBLIC WORKS DEPARTMENT ENGINEERING & ARCHITECTURE 100 North Andrews Avenue, Fort Lauderdale, Florida 33301

TOTAL:
CAD FILE: 11926-R05-ROOF
DRAWING FILE NO. 4-137-52

REVISIONS

NO.	DATE	BY	CHK'D	DESCRIPTION

DRAWN BY: RD	DATE: 6/25/13
DESIGNED BY: RD	SCALE: NTS
CHECKED BY: CS	
FIELD BOOK:	

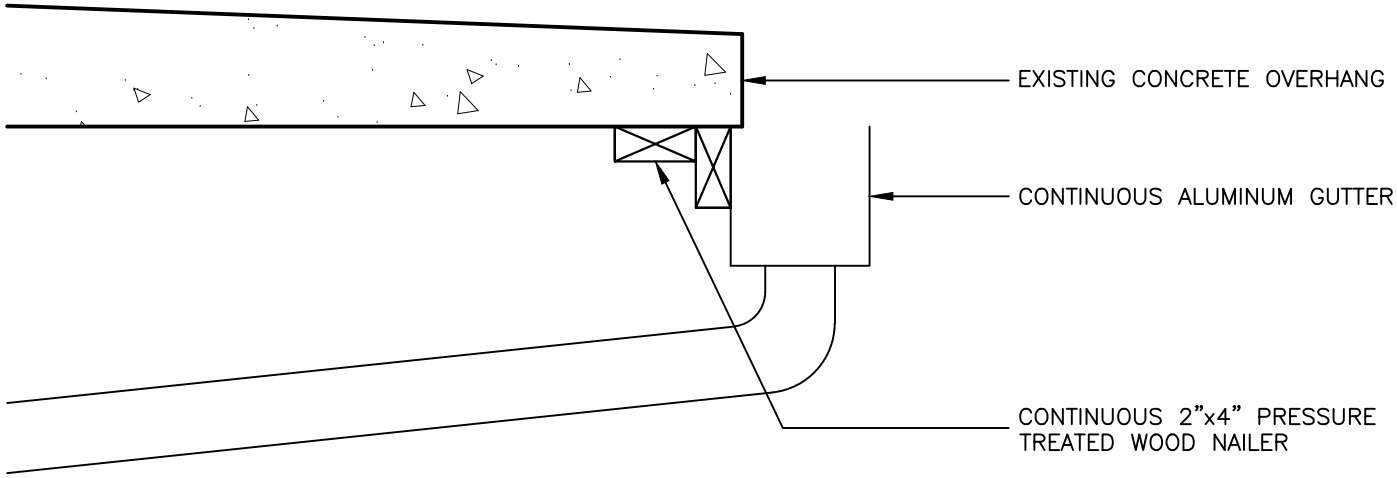

BID

130625

SHEET NO. R-6 OF 42

TOTAL:

CAD FILE: 11926-R06-ROOF

DRAWING FILE NO. 4-137-52

PROJECT # 11926
ROOFING CITY WIDE

GUTTER DETAIL AT ROOF OVERHANG

REVISIONS

NO.	DATE	BY	CHK'D	DESCRIPTION

CITY OF FORT LAUDERDALE
PUBLIC WORKS DEPARTMENT
ENGINEERING & ARCHITECTURE
100 North Andrews Avenue, Fort Lauderdale, Florida 33301

DRAWN BY: RD	DATE: 6/25/13
DESIGNED BY: RD	SCALE: NTS
CHECKED BY: CS	
FIELD BOOK:	

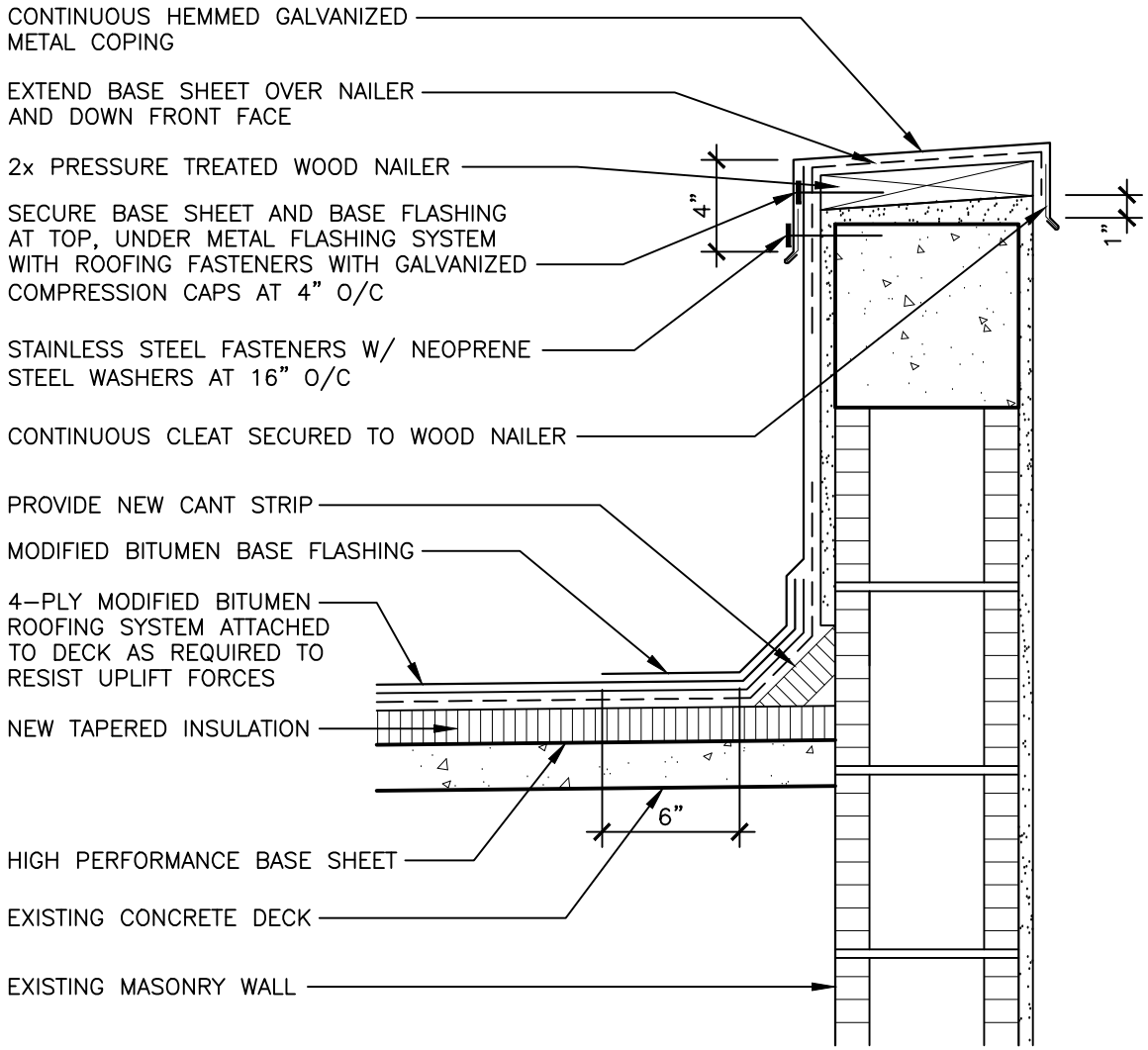

BID

130625

SHEET NO. R-7 OF 42
TOTAL:
CAD FILE: 11526-R07-ROOF
DRAWING FILE NO. 4-137-52

PROJECT # 11926
ROOFING CITY WIDE

PARAPET DETAIL WITH METAL COPING

REVISIONS				
NO.	DATE	BY	CHK'D	DESCRIPTION

CITY OF FORT LAUDERDALE
PUBLIC WORKS DEPARTMENT
ENGINEERING & ARCHITECTURE
100 North Andrews Avenue, Fort Lauderdale, Florida 33301

DRAWN BY: RD	DATE: 6/25/13
DESIGNED BY: RD	SCALE: NTS
CHECKED BY: CS	
FIELD BOOK:	

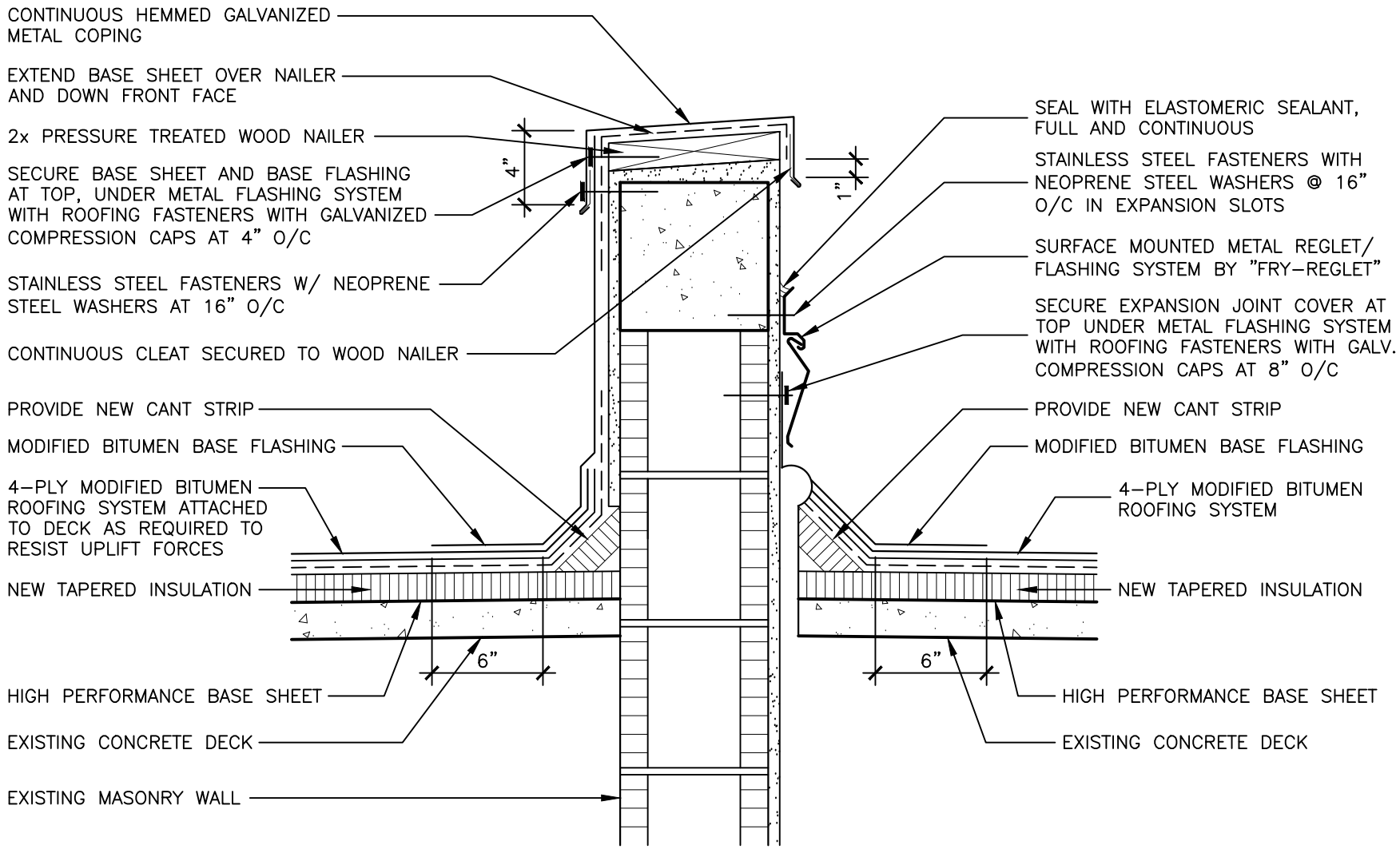

BID

130625

DRAWING FILE NO. 4-137-52	CAD FILE: 11926-R08-ROOF
TOTAL:	SHEET NO. R-8 OF 42

PROJECT # 11926
ROOFING CITY WIDE

PARAPET DETAIL AT EXPANSION JOINT

REVISIONS

NO.	DATE	BY	CHK'D	DESCRIPTION

CITY OF FORT LAUDERDALE
PUBLIC WORKS DEPARTMENT
ENGINEERING & ARCHITECTURE
100 North Andrews Avenue, Fort Lauderdale, Florida 33301

DRAWN BY: RD	DATE: 6/25/13
DESIGNED BY: RD	SCALE: NTS
CHECKED BY: CS	
FIELD BOOK:	

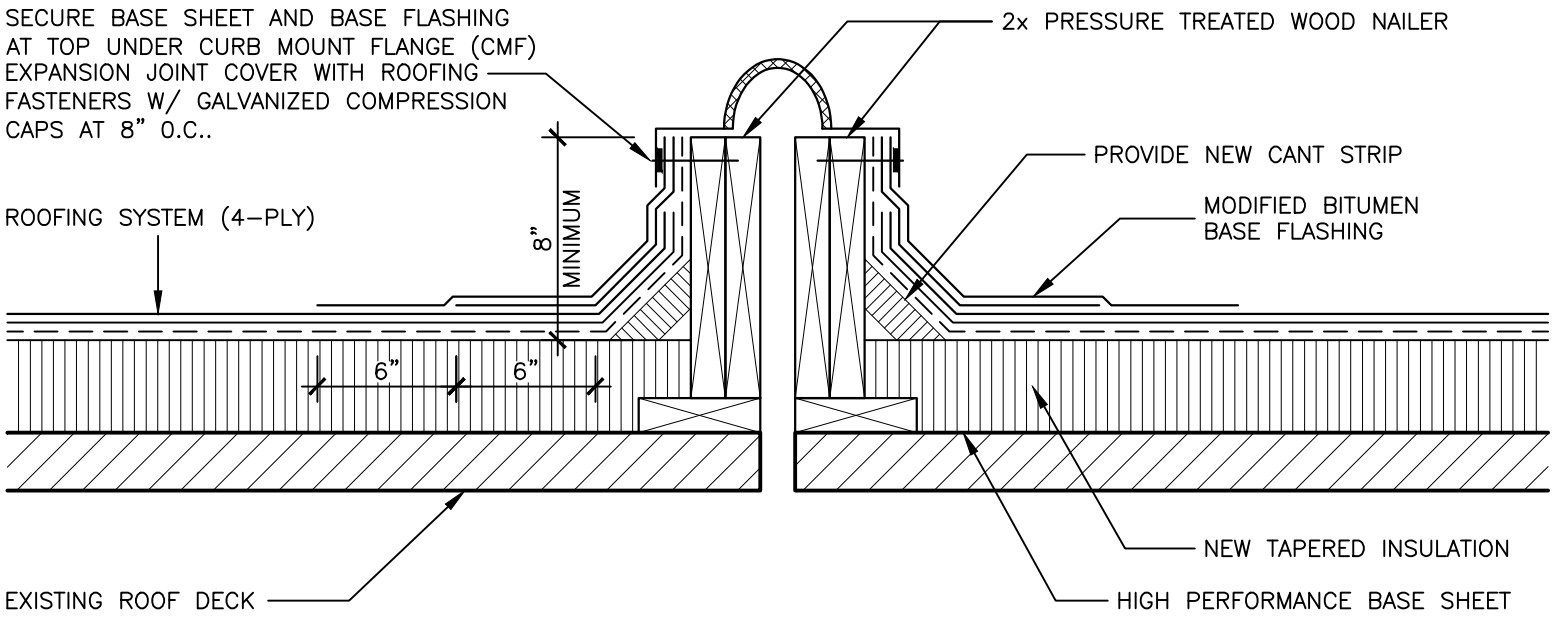

BID

130625

SHEET NO. R-9 OF 42	PROJECT # 11926 ROOFING CITY WIDE ROOF EXPANSION JOINT DETAIL	CITY OF FORT LAUDERDALE PUBLIC WORKS DEPARTMENT ENGINEERING & ARCHITECTURE 100 North Andrews Avenue, Fort Lauderdale, Florida 33301	DRAWN BY: RD DATE: 6/25/13 DESIGNED BY: RD SCALE: NTS CHECKED BY: CS FIELD BOOK:

TOTAL:
CAD FILE: 11926-R09-ROOF
DRAWING FILE NO. 4-137-52

REVISIONS

NO.	DATE	BY	CHK'D	DESCRIPTION

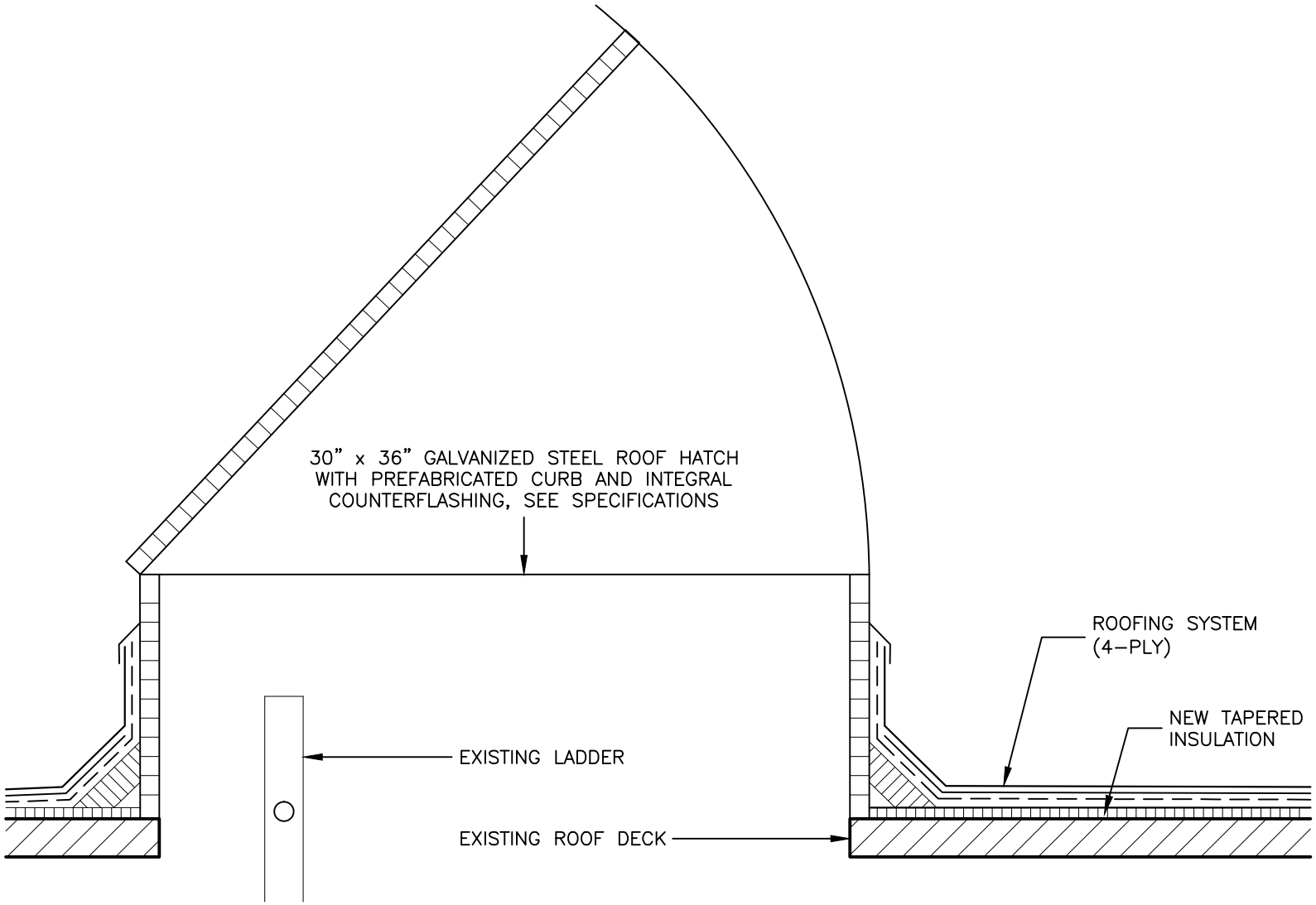

BID

130625

SHEET NO.	R-10
OF	42
TOTAL:	
CAD FILE:	11526-R10-ROOF
DRAWING FILE NO.	4-137-52

PROJECT # 11926
ROOFING CITY WIDE

ROOF HATCH DETAIL

REVISIONS

NO.	DATE	BY	CHK'D	DESCRIPTION

CITY OF FORT LAUDERDALE
PUBLIC WORKS DEPARTMENT
ENGINEERING & ARCHITECTURE
100 North Andrews Avenue, Fort Lauderdale, Florida 33301

DRAWN BY: RD	DATE: 6/25/13
DESIGNED BY: RD	SCALE: NTS
CHECKED BY: CS	
FIELD BOOK:	

NEW EXHAUST FANS OR ROOF VENTS SHALL BE OF THE SAME MATERIAL AND CAPACITY AS THOSE REMOVED. WORK SHALL BE DONE BY A STATE FLORIDA LICENSED MECHANICAL CONTRACTOR TO BE RETAINED BY ROOFING CONTRACTOR.

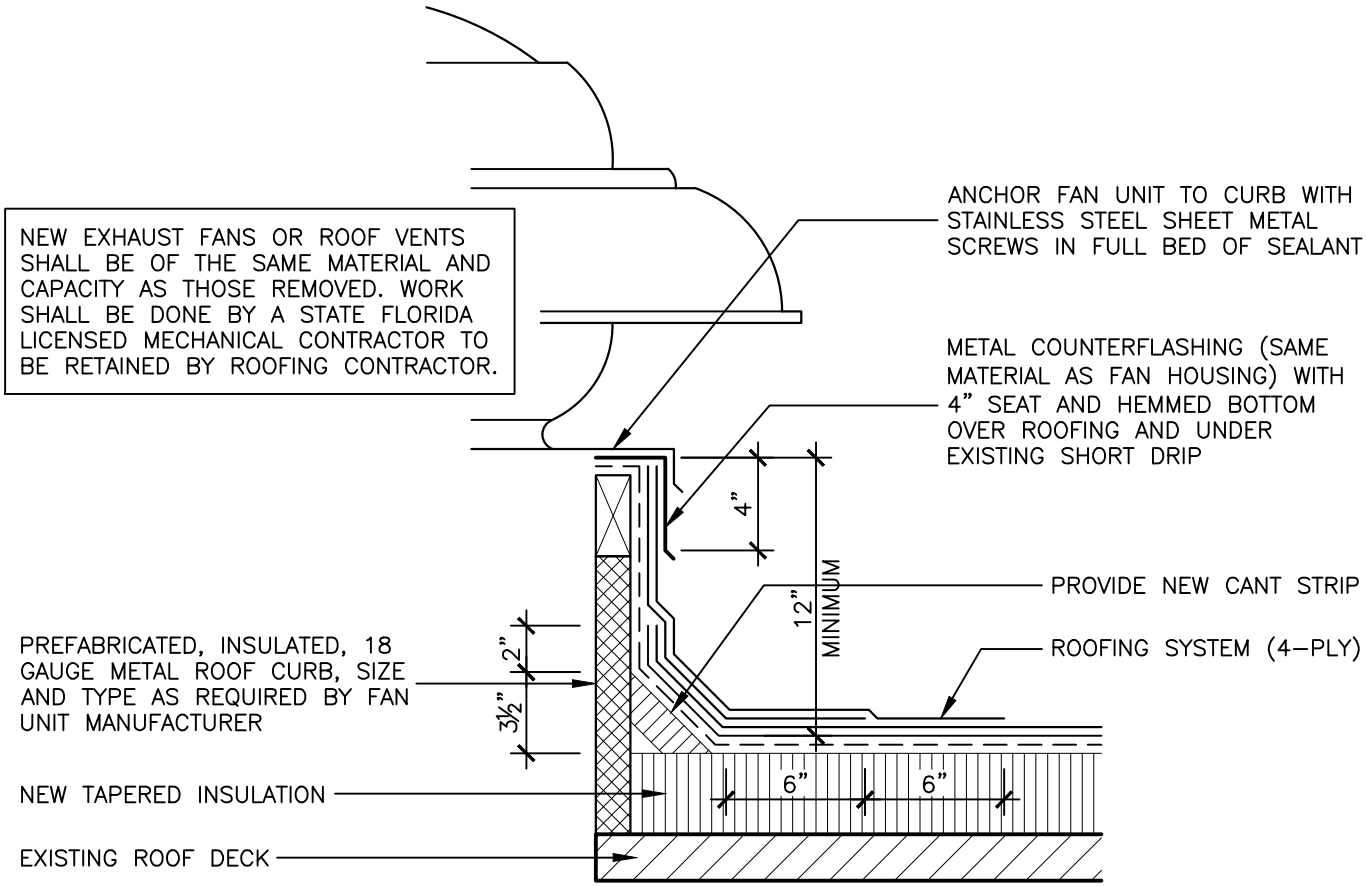

BID

130625

DRAWING FILE NO. 4-137-52	CAD FILE: 11926-R11-ROOF	TOTAL:	SHEET NO. R-11 OF 42

PROJECT # 11926
ROOFING CITY WIDE

EXHAUST FAN OR ROOF VENT DETAIL

REVISIONS

NO.	DATE	BY	CHK'D	DESCRIPTION

CITY OF FORT LAUDERDALE
PUBLIC WORKS DEPARTMENT
ENGINEERING & ARCHITECTURE
100 North Andrews Avenue, Fort Lauderdale, Florida 33301

DRAWN BY: RD	DATE: 6/25/13
DESIGNED BY: RD	SCALE: NTS
CHECKED BY: CS	
FIELD BOOK:	

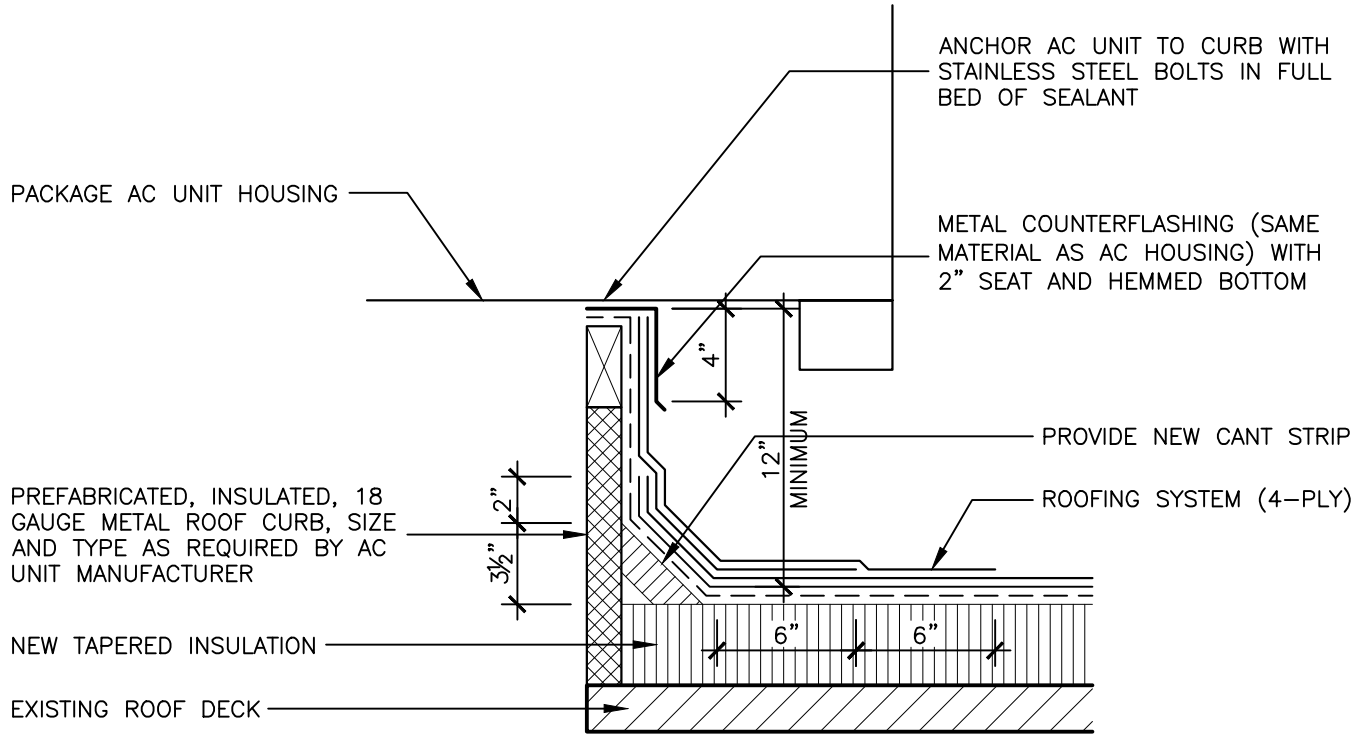

BID

130625

DRAWING FILE NO. 4-137-52	CAD FILE: 11526-R12-ROOF	TOTAL:	SHEET NO. R-12 OF 42

PROJECT # 11926
ROOFING CITY WIDE

ROOF CURB AT PACKAGE A/C DETAIL

REVISIONS

NO.	DATE	BY	CHK'D	DESCRIPTION

CITY OF FORT LAUDERDALE
PUBLIC WORKS DEPARTMENT
ENGINEERING & ARCHITECTURE
100 North Andrews Avenue, Fort Lauderdale, Florida 33301

DRAWN BY: RD	DATE: 6/25/13
DESIGNED BY: RD	SCALE: NTS
CHECKED BY: CS	
FIELD BOOK:	

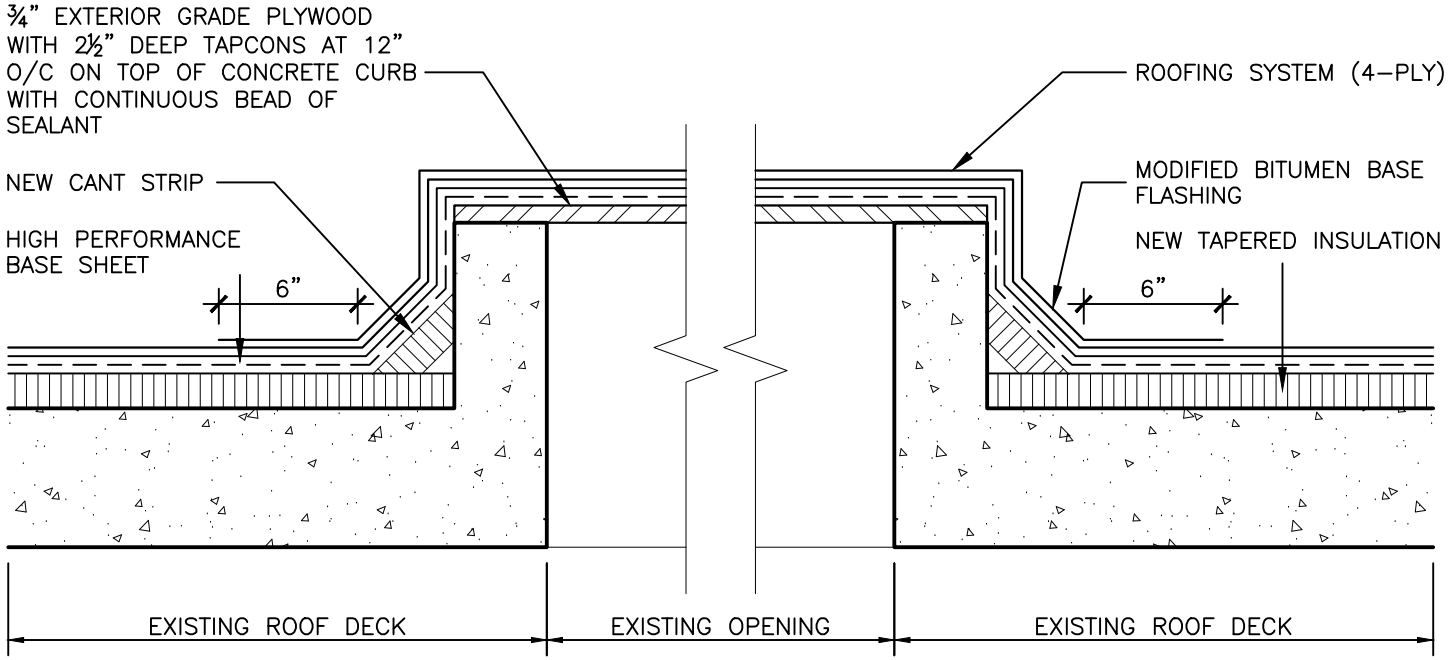

BID

130625

SHEET NO. R-13 OF 42	PROJECT # 11926 ROOFING CITY WIDE ROOF OPENING ENCLOSURE DETAIL	REVISIONS	CITY OF FORT LAUDERDALE PUBLIC WORKS DEPARTMENT ENGINEERING & ARCHITECTURE 100 North Andrews Avenue, Fort Lauderdale, Florida 33301

NO.	DATE	BY	CHK'D	DESCRIPTION

DRAWN BY: RD	DATE: 6/25/13
DESIGNED BY: RD	SCALE: NTS
CHECKED BY: CS	
FIELD BOOK:	

TOTAL:
CAD FILE: 11926–R13–ROOF
DRAWING FILE NO. 4–137–52

City of Fort Lauderdale

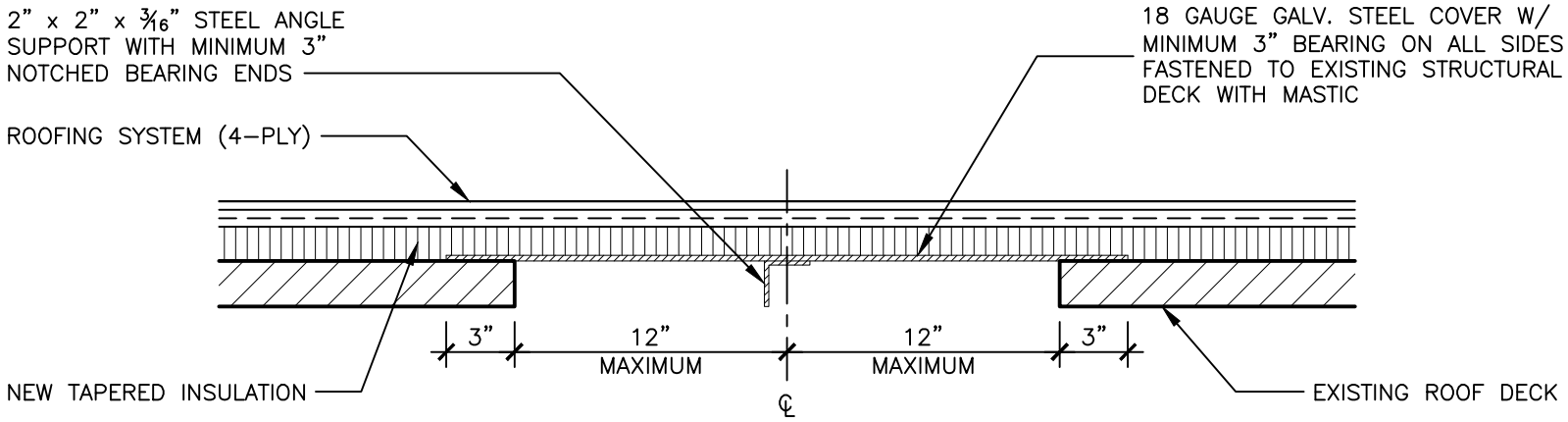

BID

130625

DRAWING FILE NO. 4-137-52	CAD FILE: 11926-R14-ROOF	TOTAL:	SHEET NO. R-14 OF 42

PROJECT # 11926
ROOFING CITY WIDE

ROOF DECK OPENING COVER DETAIL

REVISIONS

NO.	DATE	BY	CHK'D	DESCRIPTION

CITY OF FORT LAUDERDALE
PUBLIC WORKS DEPARTMENT
ENGINEERING & ARCHITECTURE
100 North Andrews Avenue, Fort Lauderdale, Florida 33301

DRAWN BY: RD	DATE: 6/25/13
DESIGNED BY: RD	SCALE: NTS
CHECKED BY: CS	
FIELD BOOK:	

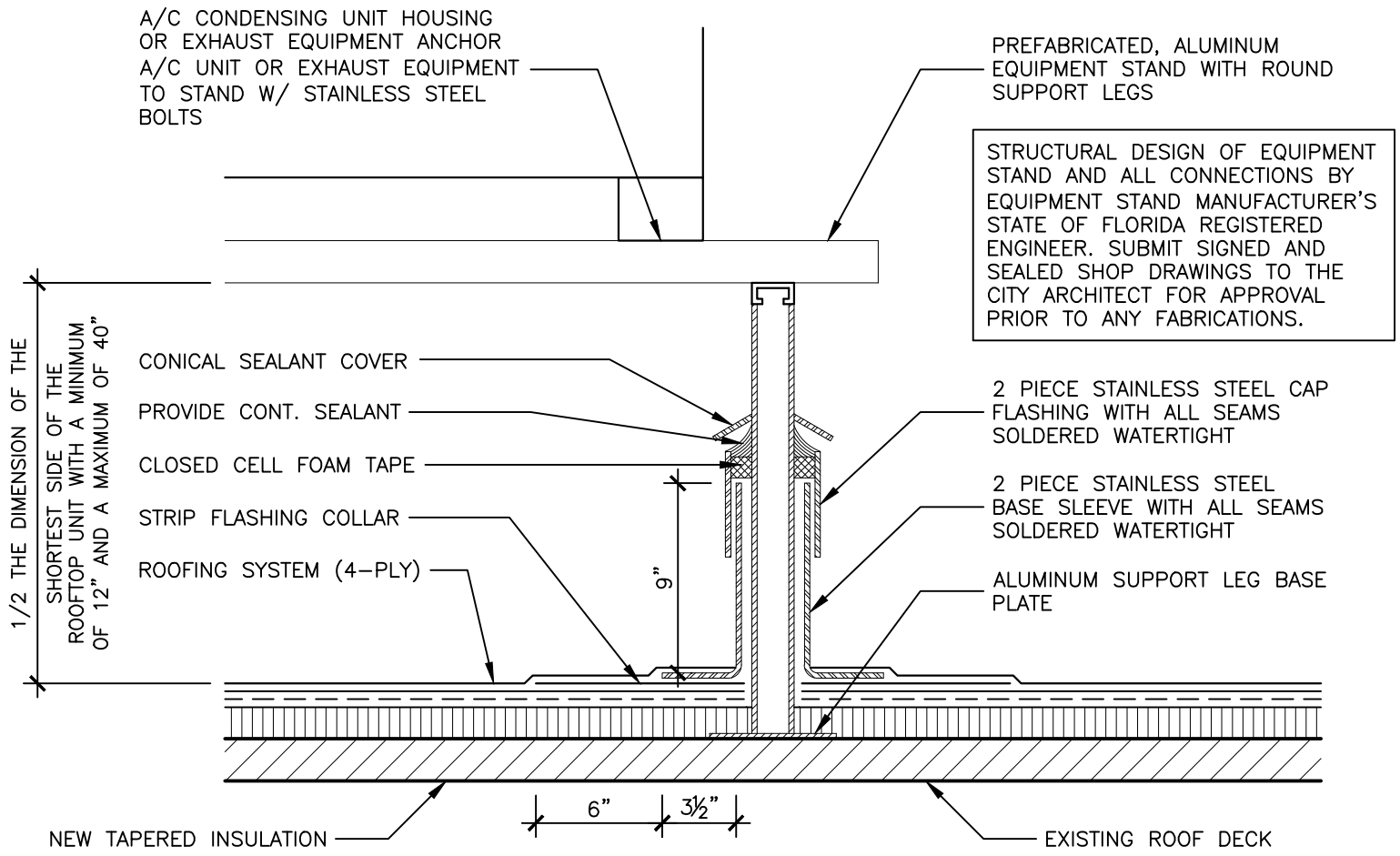

BID

130625

SHEET NO. R-15 OF 42	PROJECT # 11926 ROOFING CITY WIDE ROOF EQUIPMENT STAND DETAIL	REVISIONS	CITY OF FORT LAUDERDALE PUBLIC WORKS DEPARTMENT ENGINEERING & ARCHITECTURE 100 North Andrews Avenue, Fort Lauderdale, Florida 33301

NO.	DATE	BY	CHK'D	DESCRIPTION

DRAWN BY: RD	DATE: 6/25/13
DESIGNED BY: RD	SCALE: NTS
CHECKED BY: CS	
FIELD BOOK:	

TOTAL:
CAD FILE: 11926-R15-ROOF
DRAWING FILE NO. 4-137-52

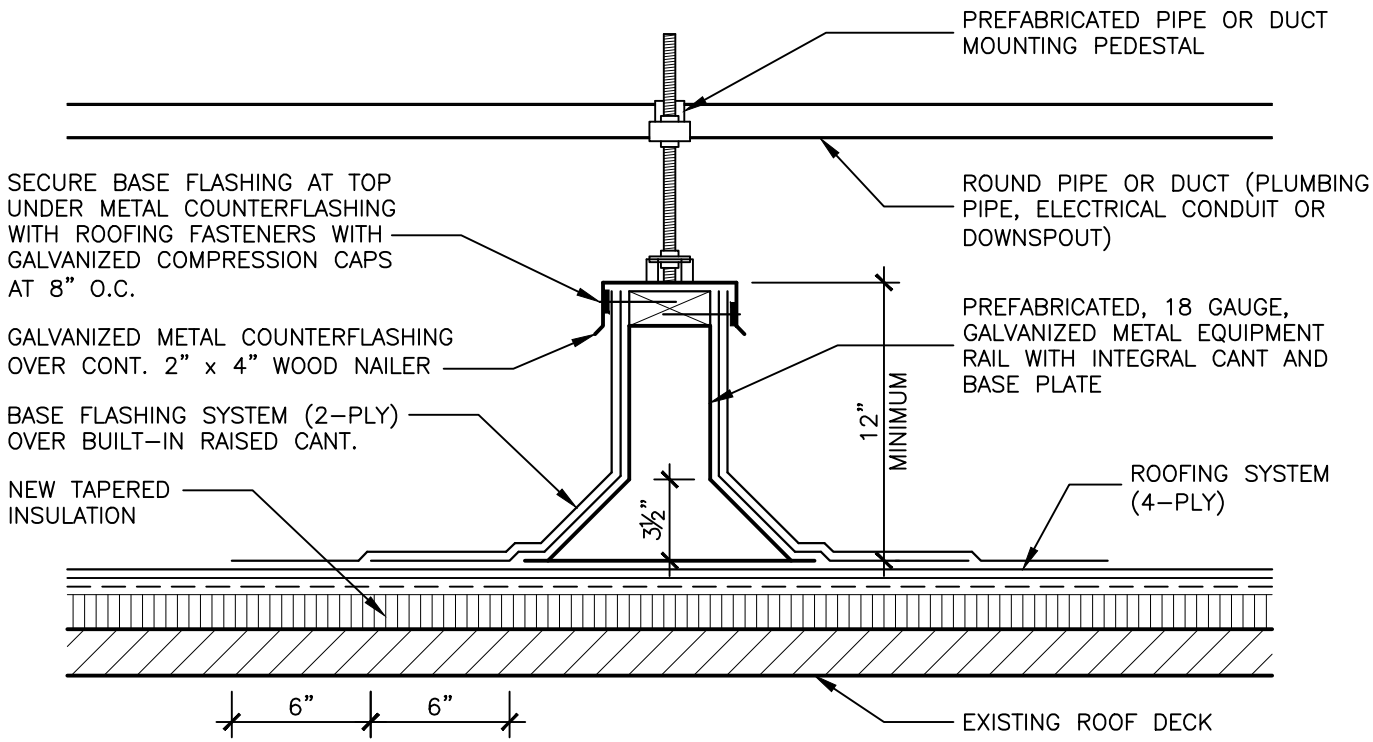

BID

130625

SHEET NO.	R-16
OF	42
TOTAL:	
CAD FILE:	11526-R16-ROOF
DRAWING FILE NO.	4-137-52

PROJECT # 11926
ROOFING CITY WIDE

PIPE OR DUCT PEDESTAL DETAIL

REVISIONS

NO.	DATE	BY	CHK'D	DESCRIPTION

CITY OF FORT LAUDERDALE
PUBLIC WORKS DEPARTMENT
ENGINEERING & ARCHITECTURE
100 North Andrews Avenue, Fort Lauderdale, Florida 33301

DRAWN BY: RD	DATE: 6/25/13
DESIGNED BY: RD	SCALE: NTS
CHECKED BY: CS	
FIELD BOOK:	

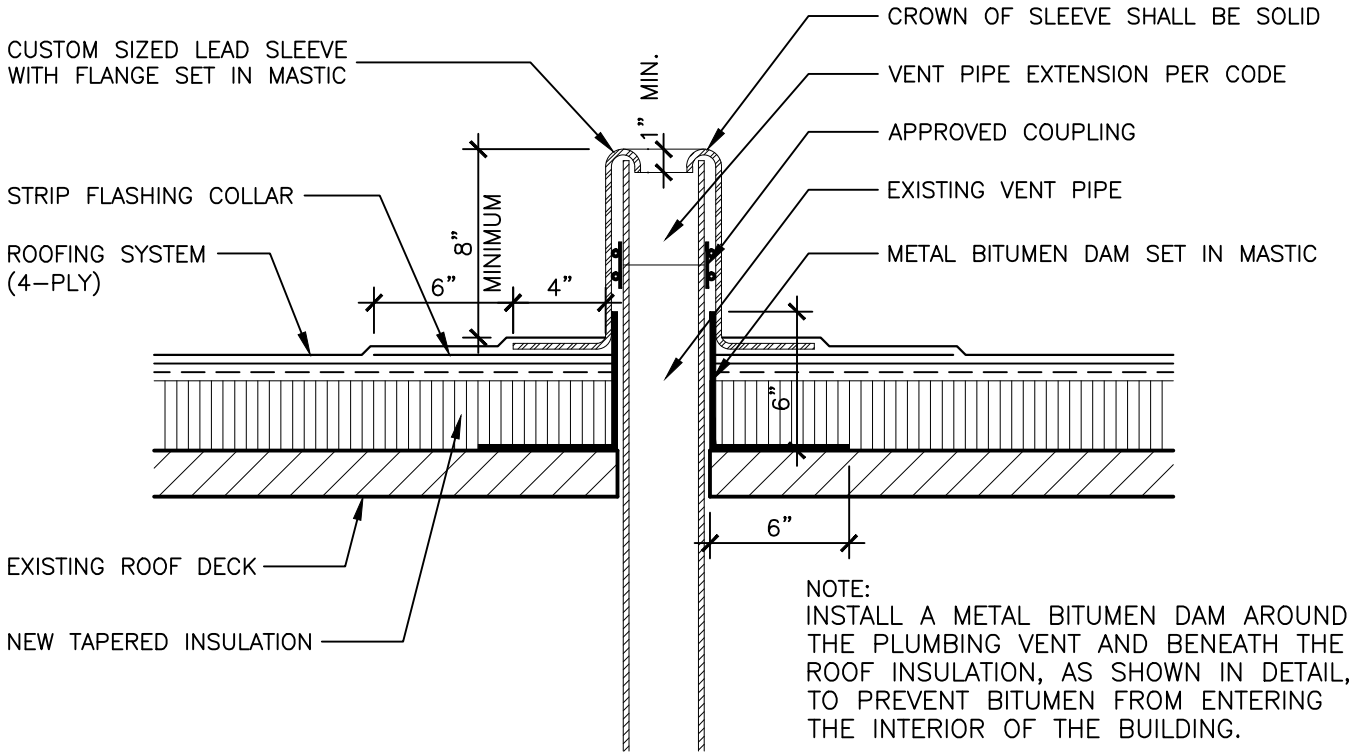

NOTE:
INSTALL A METAL BITUMEN DAM AROUND THE PLUMBING VENT AND BENEATH THE ROOF INSULATION, AS SHOWN IN DETAIL, TO PREVENT BITUMEN FROM ENTERING THE INTERIOR OF THE BUILDING.

BID

130625

DRAWING FILE NO. 4–137–52	CAD FILE: 11926–R17–ROOF	TOTAL:	SHEET NO. R-17 OF 42

PROJECT # 11926
ROOFING CITY WIDE

PLUMBING ROOF VENT DETAIL

REVISIONS

NO.	DATE	BY	CHK'D	DESCRIPTION

CITY OF FORT LAUDERDALE
PUBLIC WORKS DEPARTMENT
ENGINEERING & ARCHITECTURE
100 North Andrews Avenue, Fort Lauderdale, Florida 33301

DRAWN BY: RD	DATE: 6/25/13
DESIGNED BY: RD	SCALE: NTS
CHECKED BY: CS	
FIELD BOOK:	

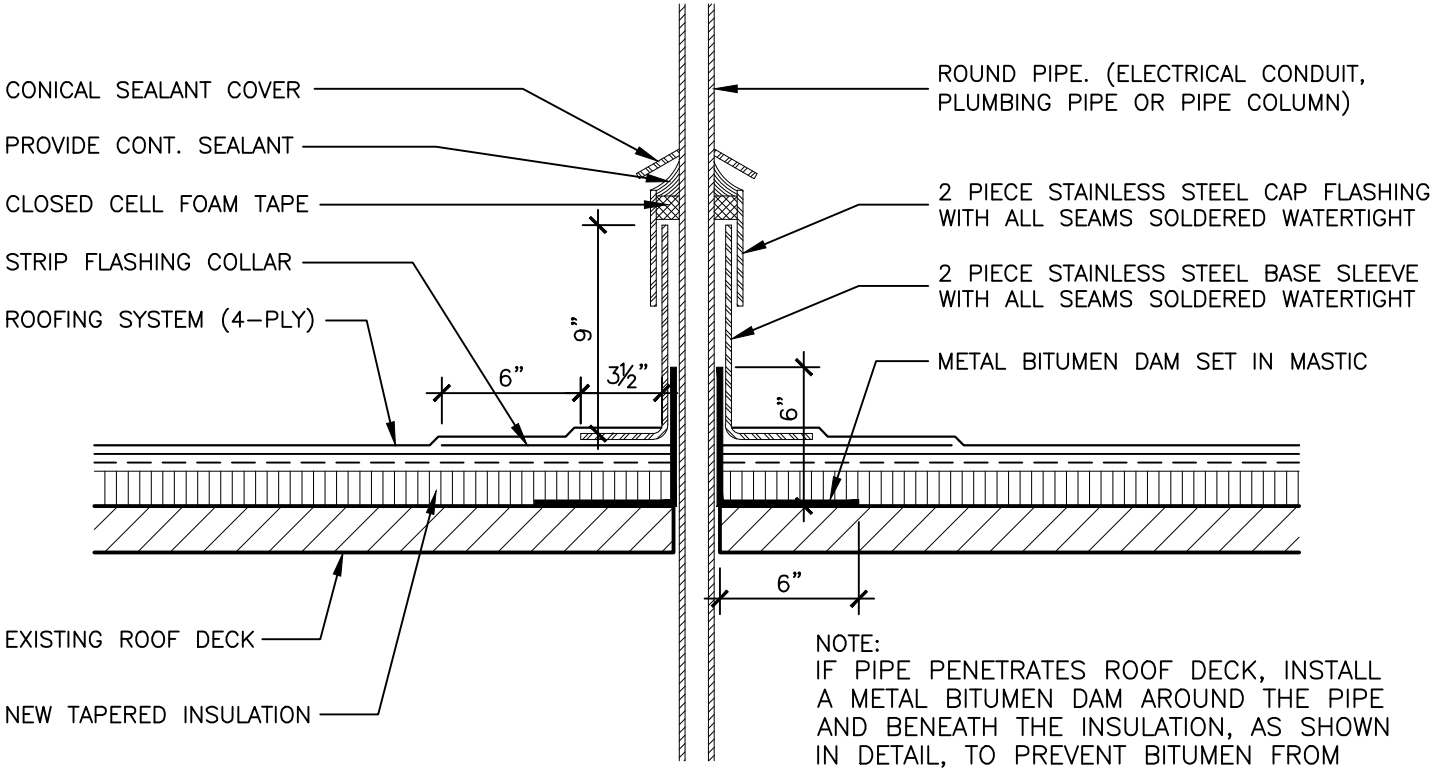

NOTE:
IF PIPE PENETRATES ROOF DECK, INSTALL A METAL BITUMEN DAM AROUND THE PIPE AND BENEATH THE INSULATION, AS SHOWN IN DETAIL, TO PREVENT BITUMEN FROM ENTERING THE INTERIOR OF THE BUILDING.

BID

130625

SHEET NO. R-18 OF 42	PROJECT # 11926 ROOFING CITY WIDE CONNECTED ROOF PENETRATION DETAIL	CITY OF FORT LAUDERDALE PUBLIC WORKS DEPARTMENT ENGINEERING & ARCHITECTURE 100 North Andrews Avenue, Fort Lauderdale, Florida 33301

TOTAL:
CAD FILE: 11926-R18-ROOF
DRAWING FILE NO. 4-137-52

REVISIONS

NO.	DATE	BY	CHK'D	DESCRIPTION

DRAWN BY: RD	DATE: 6/25/13
DESIGNED BY: RD	SCALE: NTS
CHECKED BY: CS	
FIELD BOOK:	

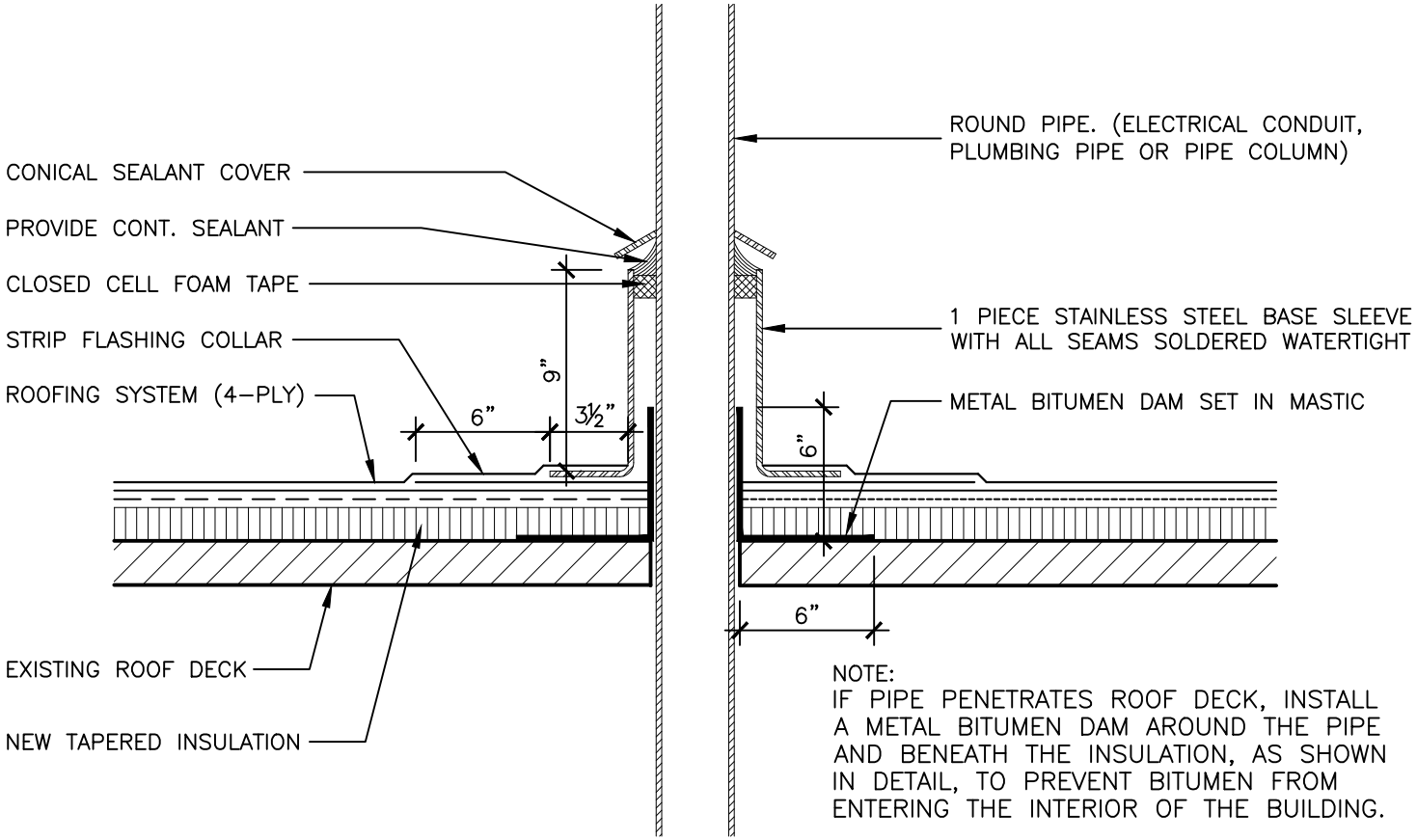

NOTE:
IF PIPE PENETRATES ROOF DECK, INSTALL A METAL BITUMEN DAM AROUND THE PIPE AND BENEATH THE INSULATION, AS SHOWN IN DETAIL, TO PREVENT BITUMEN FROM ENTERING THE INTERIOR OF THE BUILDING.

BID

130625

SHEET NO. R-19 OF 42	PROJECT # 11926 ROOFING CITY WIDE DISCONNECTED ROOF PENETRATION DETAIL	CITY OF FORT LAUDERDALE PUBLIC WORKS DEPARTMENT ENGINEERING & ARCHITECTURE 100 North Andrews Avenue, Fort Lauderdale, Florida 33301

TOTAL:
CAD FILE: 11926-R19-ROOF
DRAWING FILE NO. 4-137-52

REVISIONS

NO.	DATE	BY	CHK'D	DESCRIPTION

DRAWN BY: RD	DATE: 6/25/13
DESIGNED BY: RD	SCALE: NTS
CHECKED BY: CS	
FIELD BOOK:	

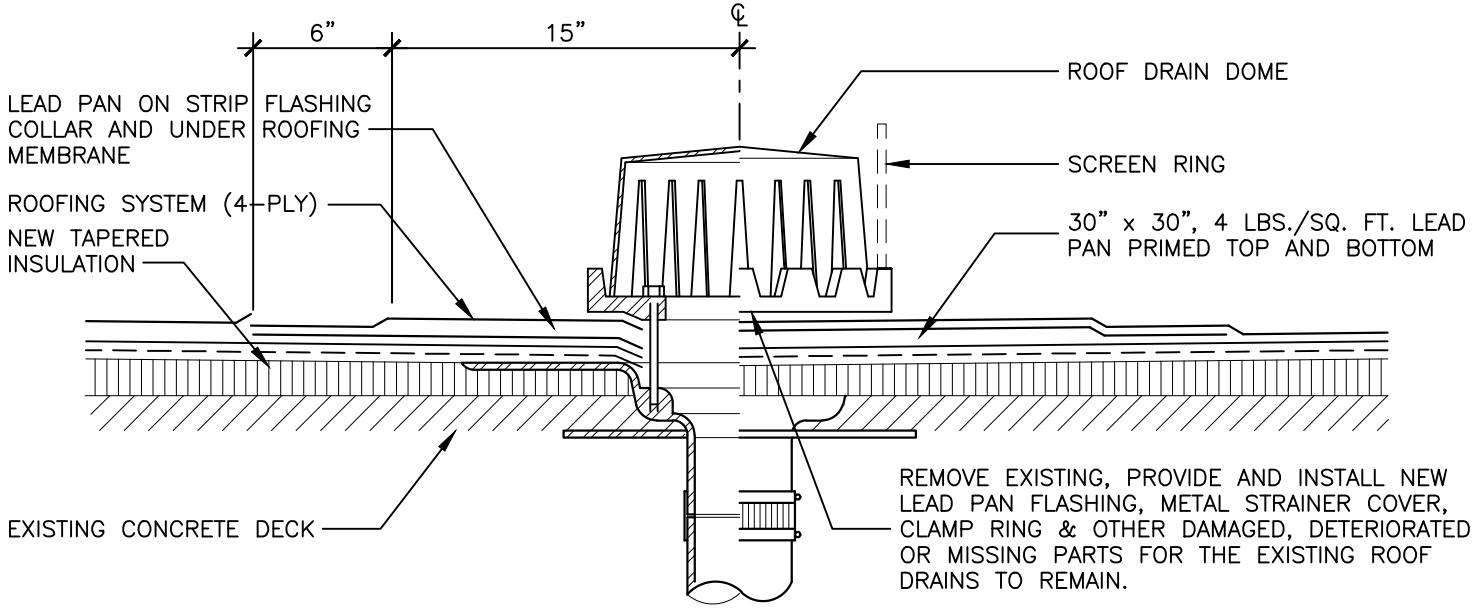

BID

130625

DRAWING FILE NO. 4-137-52	CAD FILE: 11926-R20-ROOF	TOTAL:	SHEET NO. R-20 OF 42

PROJECT # 11926
ROOFING CITY WIDE

ROOF DRAIN DETAIL

REVISIONS

NO.	DATE	BY	CHK'D	DESCRIPTION

CITY OF FORT LAUDERDALE
PUBLIC WORKS DEPARTMENT
ENGINEERING & ARCHITECTURE
100 North Andrews Avenue, Fort Lauderdale, Florida 33301

DRAWN BY: RD	DATE: 6/25/13
DESIGNED BY: RD	SCALE: NTS
CHECKED BY: CS	
FIELD BOOK:	

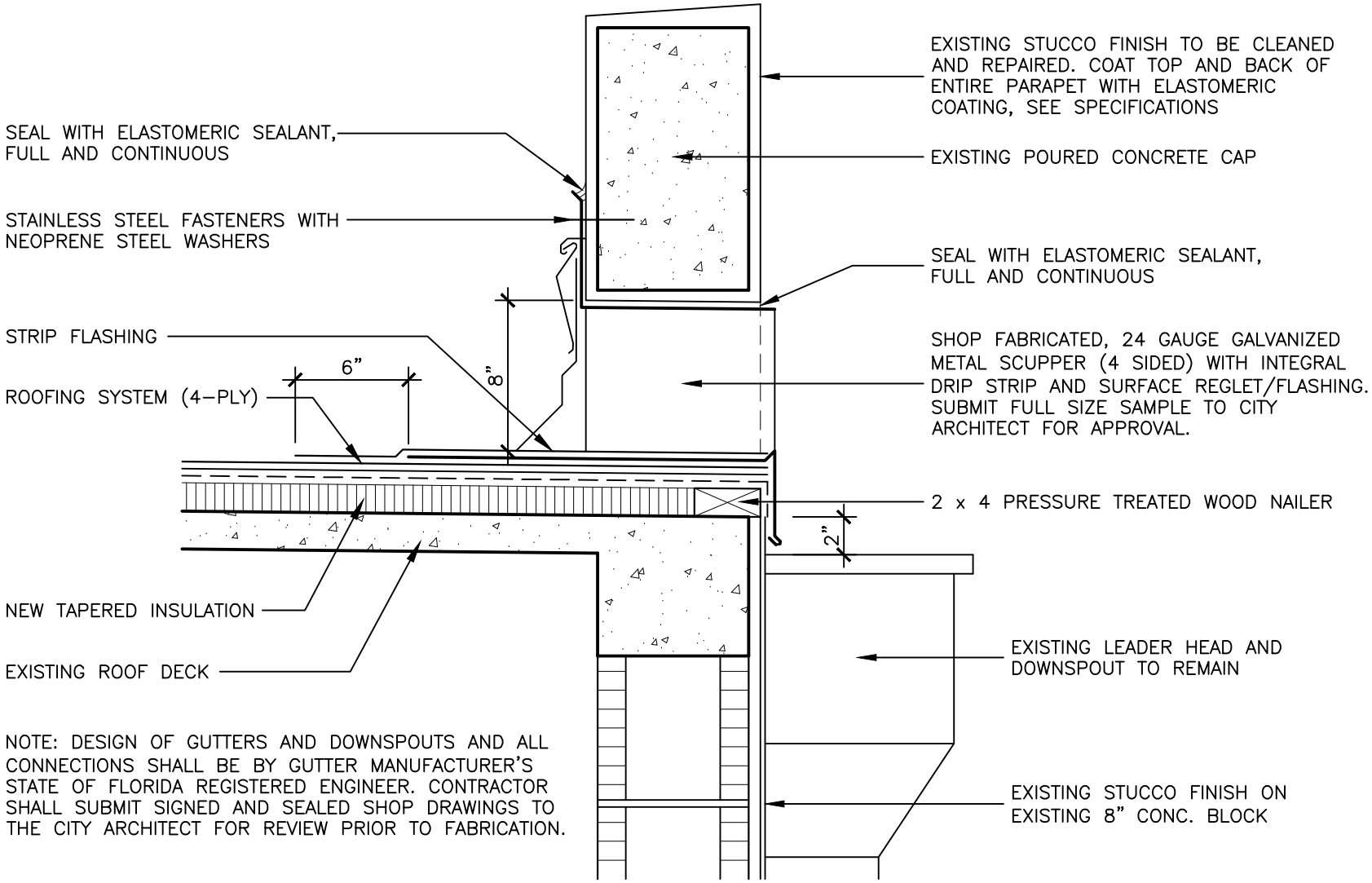

NOTE: DESIGN OF GUTTERS AND DOWNSPOUTS AND ALL CONNECTIONS SHALL BE BY GUTTER MANUFACTURER'S STATE OF FLORIDA REGISTERED ENGINEER. CONTRACTOR SHALL SUBMIT SIGNED AND SEALED SHOP DRAWINGS TO THE CITY ARCHITECT FOR REVIEW PRIOR TO FABRICATION.

BID

130625

DRAWING FILE NO. 4-137-52	CAD FILE: 11926-R21-ROOF	TOTAL:	SHEET NO. R-21 OF 42

PROJECT # 11926
ROOFING CITY WIDE

ROOF SCUPPER DETAIL

REVISIONS

NO.	DATE	BY	CHK'D	DESCRIPTION

CITY OF FORT LAUDERDALE
PUBLIC WORKS DEPARTMENT
ENGINEERING & ARCHITECTURE
100 North Andrews Avenue, Fort Lauderdale, Florida 33301

DRAWN BY: RD	DATE: 6/25/13
DESIGNED BY: RD	SCALE: NTS
CHECKED BY: CS	
FIELD BOOK:	

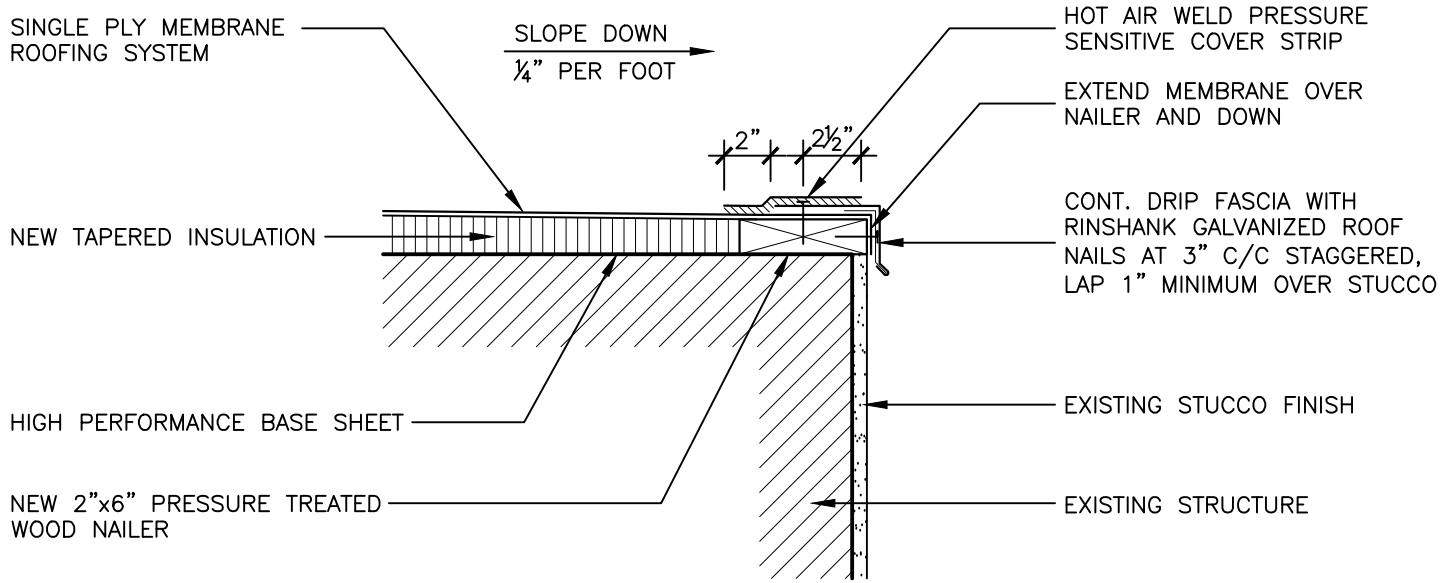

EPDM OR TPO TO BE MECHANICALLY FASTENED OR FULLY ADHERED PURSUANT TO ENGINEERED DESIGN.

BID

130625

SHEET NO. R-22 OF 42	PROJECT # 11926 ROOFING CITY WIDE ROOF EDGE DETAIL WITHOUT FASCIA	REVISIONS	CITY OF FORT LAUDERDALE PUBLIC WORKS DEPARTMENT ENGINEERING & ARCHITECTURE 100 North Andrews Avenue, Fort Lauderdale, Florida 33301

NO.	DATE	BY	CHK'D	DESCRIPTION

DRAWN BY: RD	DATE: 6/25/12
DESIGNED BY: RD	SCALE: NTS
CHECKED BY: CS	
FIELD BOOK:	

TOTAL:
CAD FILE: 11926-R22-ROOF
DRAWING FILE NO. 4-137-52

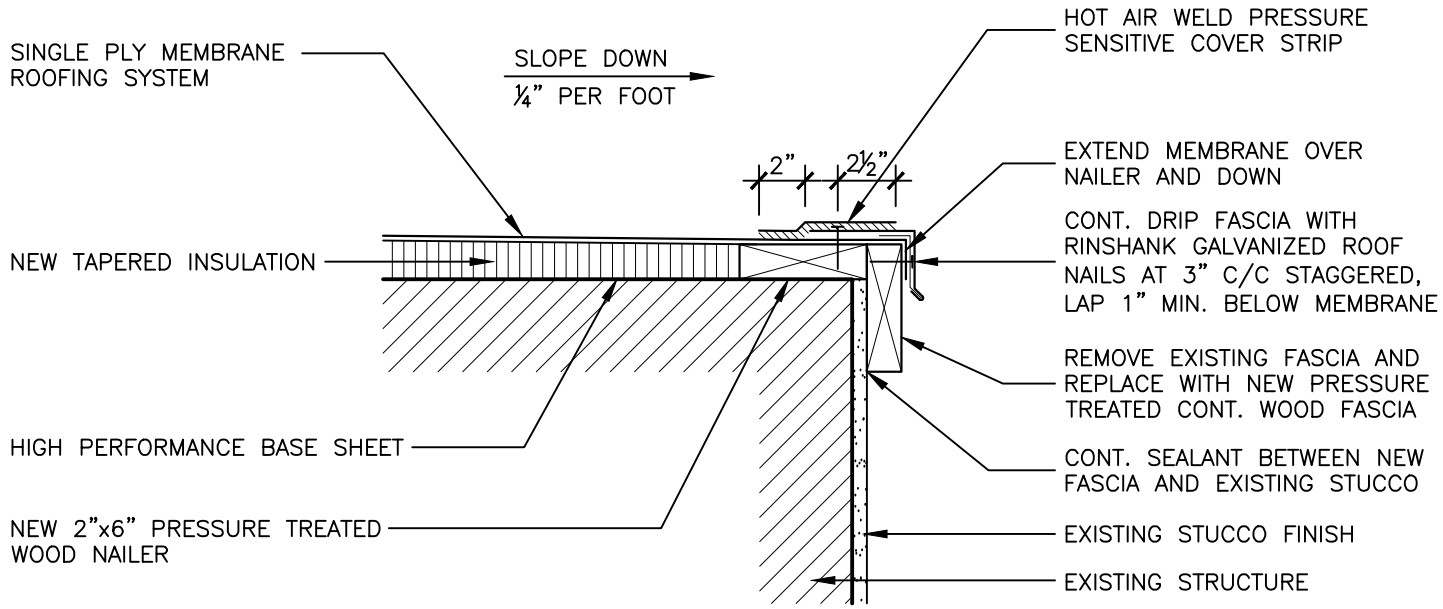

EPDM OR TPO TO BE MECHANICALLY FASTENED OR FULLY ADHERED PURSUANT TO ENGINEERED DESIGN.

BID

130625

DRAWING FILE NO. 4-137-52	CAD FILE: 11926-R23-ROOF	TOTAL:	SHEET NO. R-23 OF 42

PROJECT # 11926
ROOFING CITY WIDE

ROOF EDGE DETAIL WITH FASCIA

REVISIONS

NO.	DATE	BY	CHK'D	DESCRIPTION

CITY OF FORT LAUDERDALE
PUBLIC WORKS DEPARTMENT
ENGINEERING & ARCHITECTURE
100 North Andrews Avenue, Fort Lauderdale, Florida 33301

DRAWN BY: RD	DATE: 6/25/13
DESIGNED BY: RD	SCALE: NTS
CHECKED BY: CS	
FIELD BOOK:	

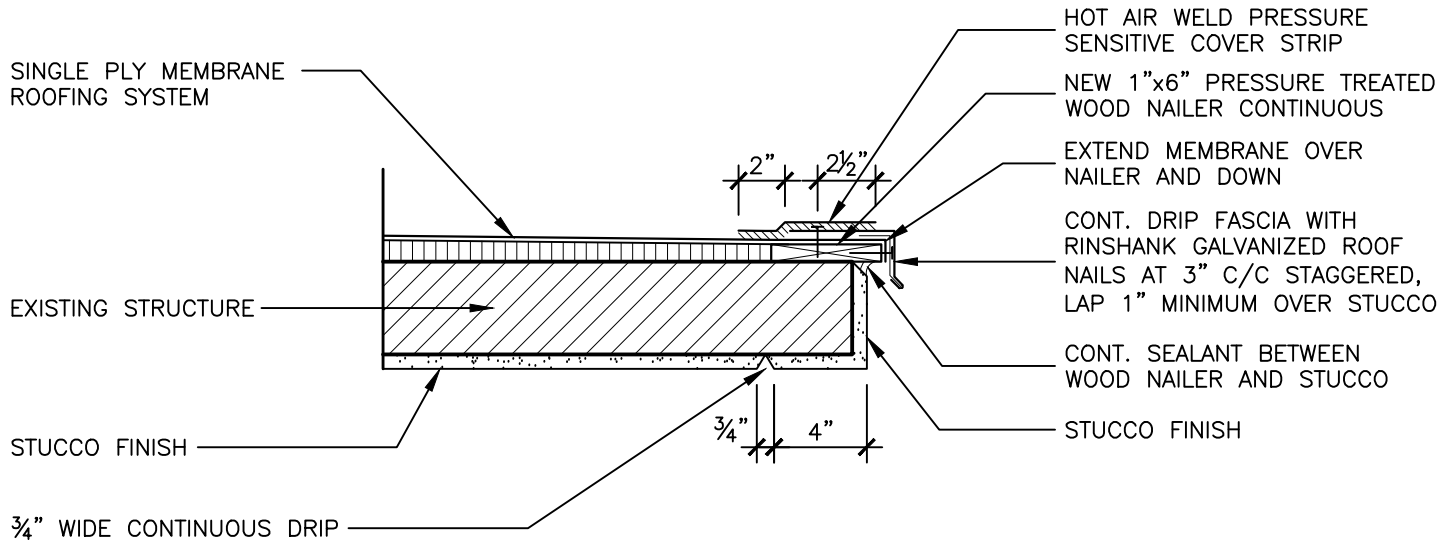

EPDM OR TPO TO BE MECHANICALLY FASTENED OR FULLY ADHERED PURSUANT TO ENGINEERED DESIGN.

BID

130625

DRAWING FILE NO. 4-137-52	CAD FILE: 11926-R24-ROOF	TOTAL:	SHEET NO. R-24 OF 42

PROJECT # 11926
ROOFING CITY WIDE

ROOF EDGE DETAIL AT OVERHANG

REVISIONS

NO.	DATE	BY	CHK'D	DESCRIPTION

CITY OF FORT LAUDERDALE
PUBLIC WORKS DEPARTMENT
ENGINEERING & ARCHITECTURE
100 North Andrews Avenue, Fort Lauderdale, Florida 33301

DRAWN BY: RD	DATE: 6/25/13
DESIGNED BY: RD	SCALE: NTS
CHECKED BY: CS	
FIELD BOOK:	

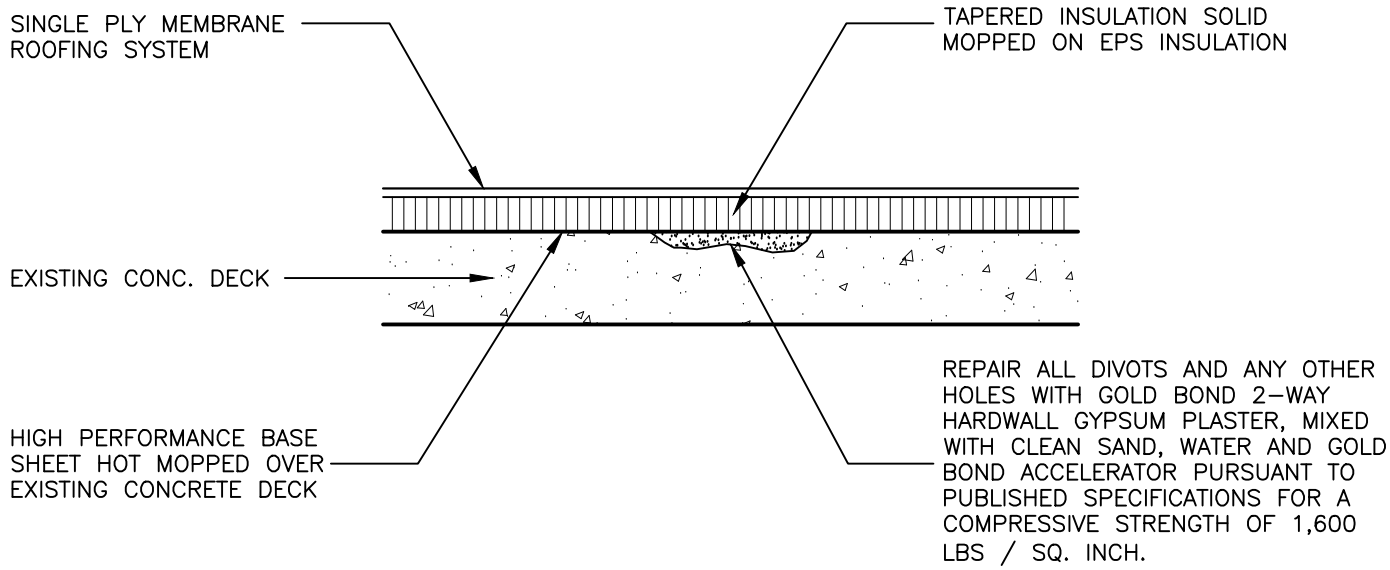

EPDM OR TPO TO BE MECHANICALLY FASTENED OR FULLY ADHERED PURSUANT TO ENGINEERED DESIGN.

BID

130625

SHEET NO. R-25 OF 42	TOTAL:	CAD FILE: 11926-R25-ROOF	DRAWING FILE NO. 4-137-52

PROJECT # 11926
ROOFING CITY WIDE

INSULATION TO ROOF DECK DETAIL

REVISIONS

NO.	DATE	BY	CHK'D	DESCRIPTION

CITY OF FORT LAUDERDALE
PUBLIC WORKS DEPARTMENT
ENGINEERING & ARCHITECTURE
100 North Andrews Avenue, Fort Lauderdale, Florida 33301

DRAWN BY: RD	DATE: 6/25/13
DESIGNED BY: RD	SCALE: NTS
CHECKED BY: CS	
FIELD BOOK:	

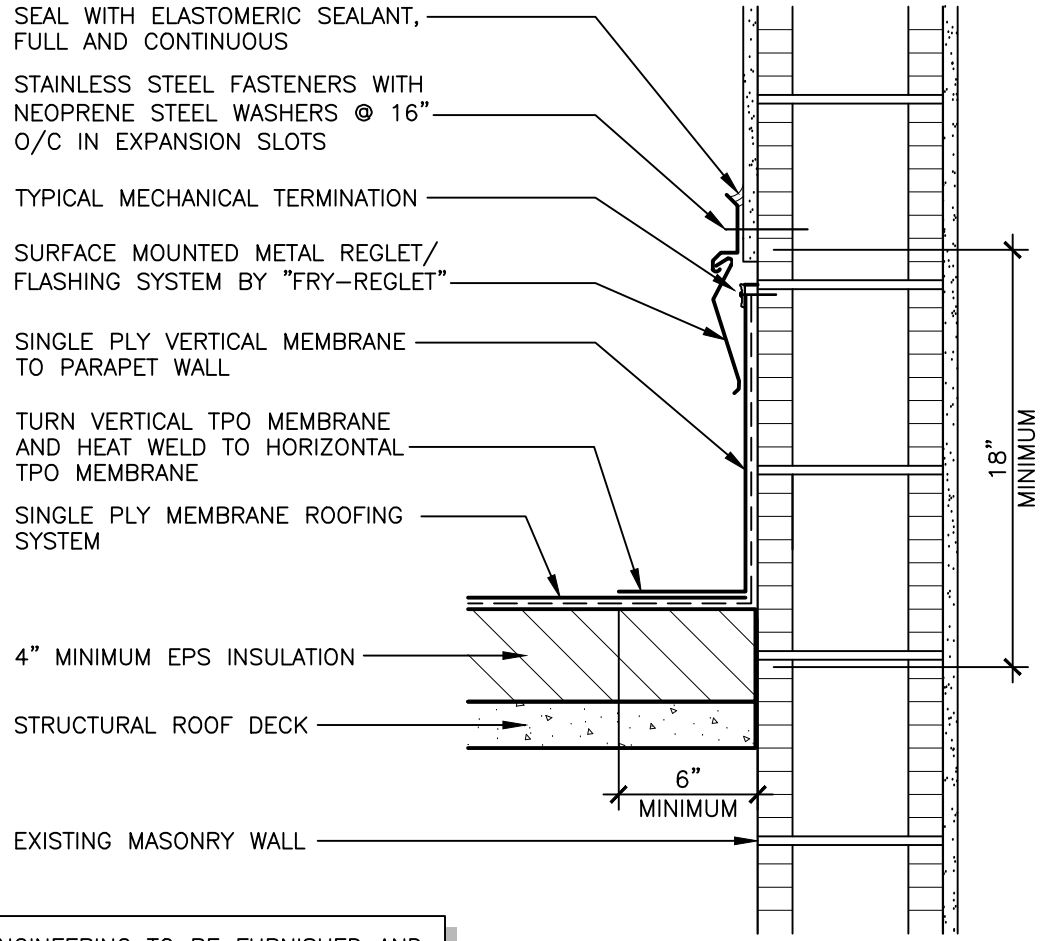

ALL REQUIRED ENGINEERING TO BE FURNISHED AND PAID FOR BY CONTRACTOR. PREPARE FOR, FURNISH AND INSTALL NEW INSULATION, MEMBRANE, AND ALL FLASHING PERSUANT TO SPECIFICATIONS.

EPDM OR TPO TO BE MECHANICALLY FASTENED OR FULLY ADHERED PURSUANT TO ENGINEERED DESIGN.

BID

130625

SHEET NO.	R-26
OF	42
TOTAL:	
CAD FILE:	11926-R26-ROOF
DRAWING FILE NO.	4-137-52

PROJECT # 11926
ROOFING CITY WIDE

FLASHING DETAIL AT WALL OR COLUMN

REVISIONS

NO.	DATE	BY	CHK'D	DESCRIPTION

CITY OF FORT LAUDERDALE
PUBLIC WORKS DEPARTMENT
ENGINEERING & ARCHITECTURE
100 North Andrews Avenue, Fort Lauderdale, Florida 33301

DRAWN BY: RD	DATE: 6/25/13
DESIGNED BY: RD	SCALE: NTS
CHECKED BY: CS	
FIELD BOOK:	

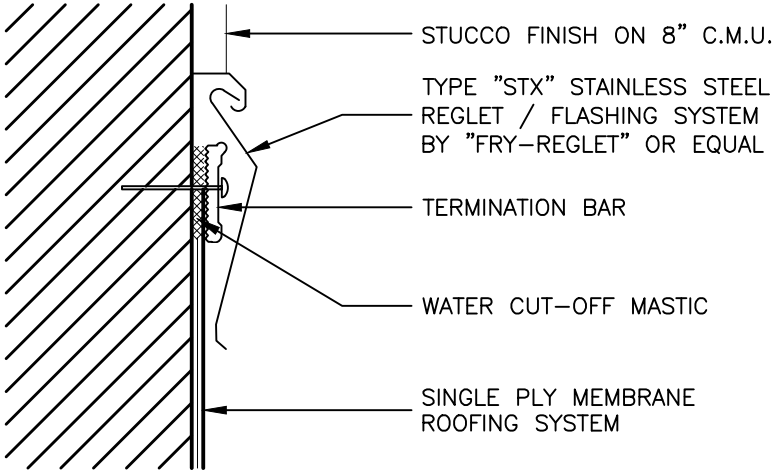

NOTES:

1. APPLY ON HARD SMOOTH SURFACE ONLY; NOT FOR USE ON EXPOSED WOOD.
2. WATER CUT-OFF MASTIC MUST BE HELD UNDER CONSTANT COMPRESSION.
3. DO NOT WRAP COMPRESSION TERMINATION AROUND CORNERS.
4. ALLOW 1/4" MINIMUM TO 1/2" MAXIMUM SPACING BETWEEN CONSECUTIVE LENGTHS OF TERMINATION BAR.
5. TERMINATION BAR MUST BE 1/8" x 1" MINIMUM.

EPDM OR TPO TO BE MECHANICALLY FASTENED OR FULLY ADHERED PURSUANT TO ENGINEERED DESIGN.

BID

130625

SHEET NO. R-27 OF 42
TOTAL:
CAD FILE: 11926-R27-ROOF
DRAWING FILE NO. 4-137-52

PROJECT # 11926
ROOFING CITY WIDE

MECHANICAL TERMINATION DETAIL

REVISIONS

NO.	DATE	BY	CHK'D	DESCRIPTION

CITY OF FORT LAUDERDALE
PUBLIC WORKS DEPARTMENT
ENGINEERING & ARCHITECTURE
100 North Andrews Avenue, Fort Lauderdale, Florida 33301

DRAWN BY: RD	DATE: 6/25/13
DESIGNED BY: RD	SCALE: NTS
CHECKED BY: CS	
FIELD BOOK:	

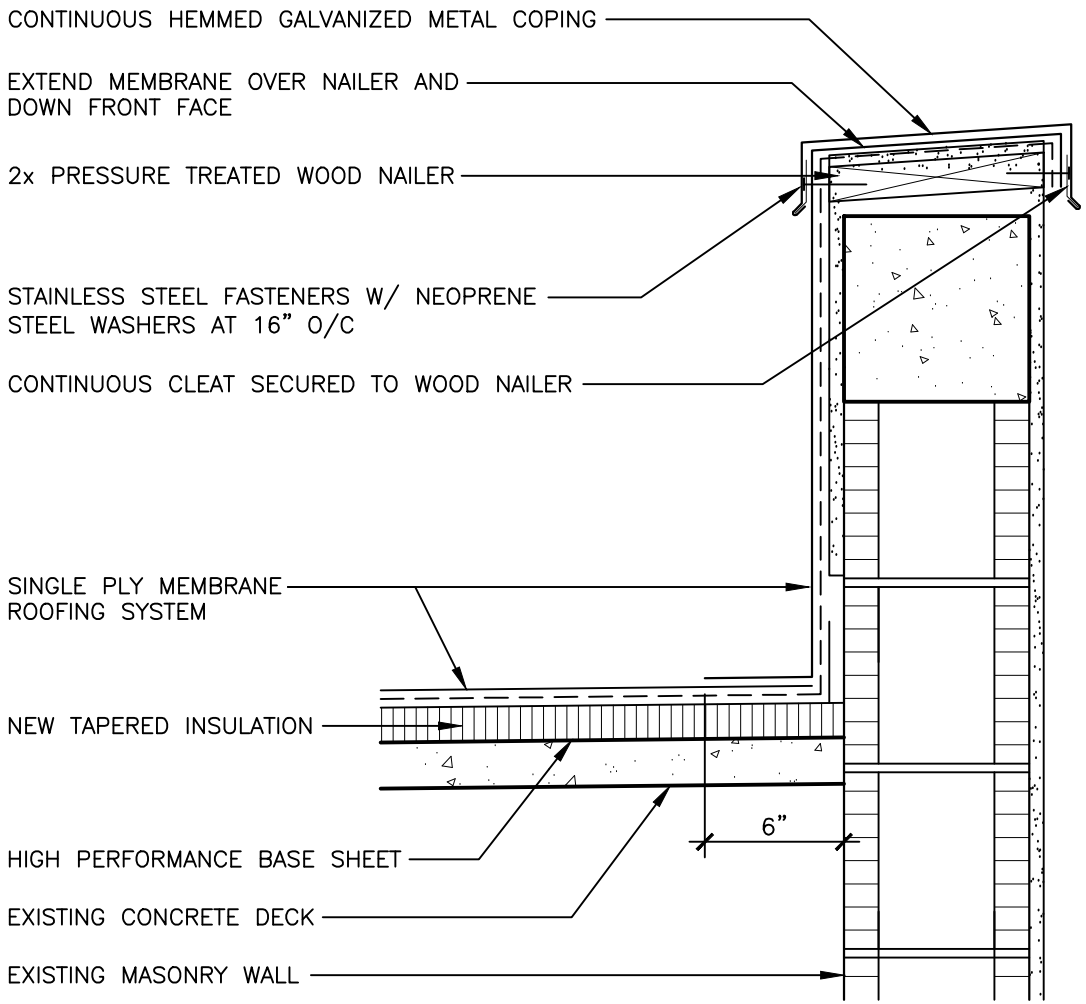

EPDM OR TPO TO BE MECHANICALLY FASTENED OR FULLY ADHERED PURSUANT TO ENGINEERED DESIGN.

BID

130625

SHEET NO. R-28 OF 42
TOTAL:
CAD FILE: 11926-R28-ROOF
DRAWING FILE NO. 4-137-52

PROJECT # 11926
ROOFING CITY WIDE

PARAPET DETAIL WITH METAL COPING

REVISIONS

NO.	DATE	BY	CHK'D	DESCRIPTION

CITY OF FORT LAUDERDALE
PUBLIC WORKS DEPARTMENT
ENGINEERING & ARCHITECTURE
100 North Andrews Avenue, Fort Lauderdale, Florida 33301

DRAWN BY: RD	DATE: 6/25/13
DESIGNED BY: RD	SCALE: NTS
CHECKED BY: CS	
FIELD BOOK:	

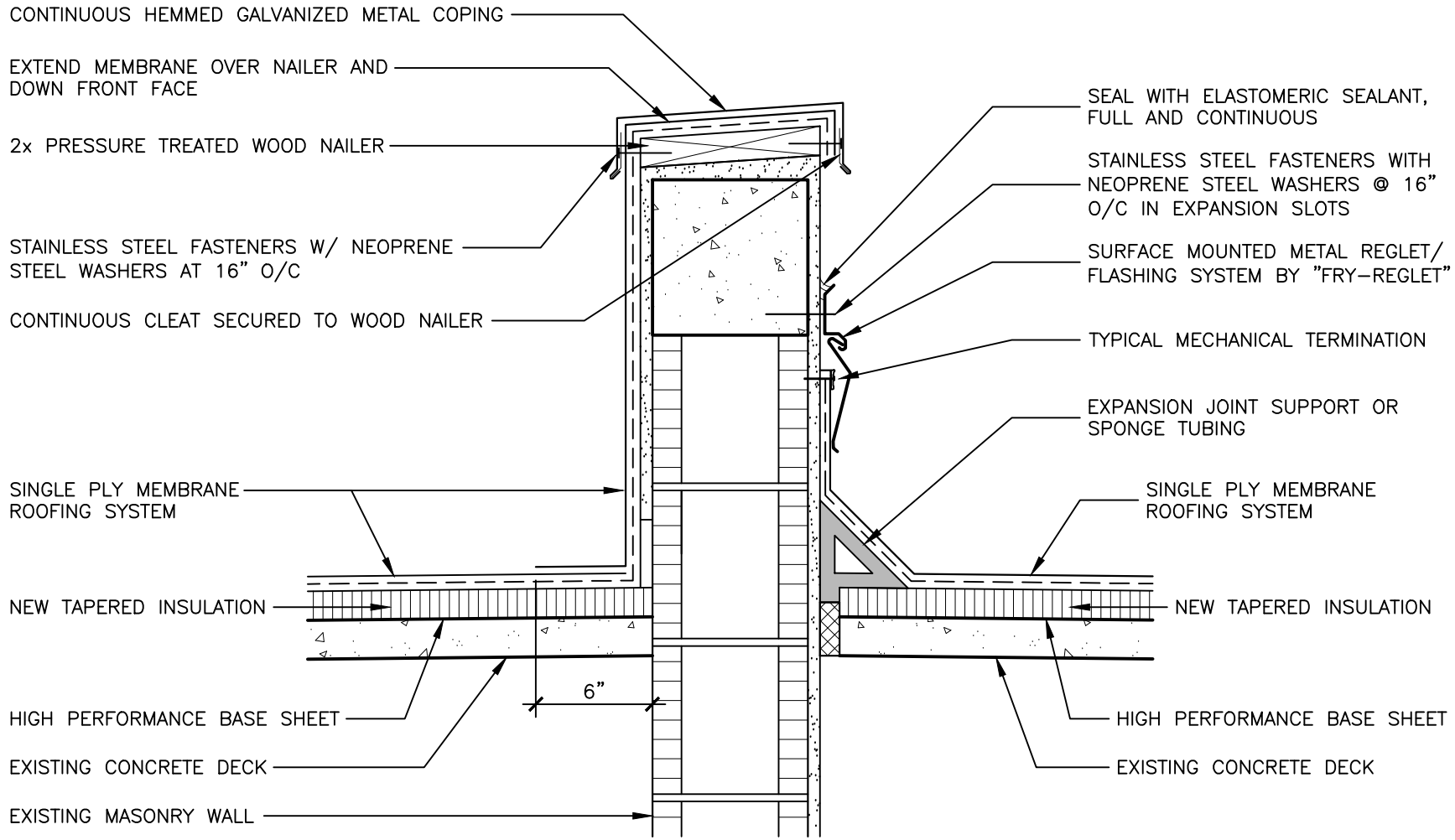

EPDM OR TPO TO BE MECHANICALLY FASTENED OR FULLY ADHERED PURSUANT TO ENGINEERED DESIGN.

BID

130625

SHEET NO.	R-29
OF	42
TOTAL:	
CAD FILE:	11926-R29-ROOF
DRAWING FILE NO.	4-137-52

PROJECT # 11926
ROOFING CITY WIDE

PARAPET DETAIL AT EXPANSION JOINT

REVISIONS

NO.	DATE	BY	CHK'D	DESCRIPTION

CITY OF FORT LAUDERDALE
PUBLIC WORKS DEPARTMENT
ENGINEERING & ARCHITECTURE
100 North Andrews Avenue, Fort Lauderdale, Florida 33301

DRAWN BY: RD	DATE: 6/25/13
DESIGNED BY: RD	SCALE: NTS
CHECKED BY: CS	
FIELD BOOK:	

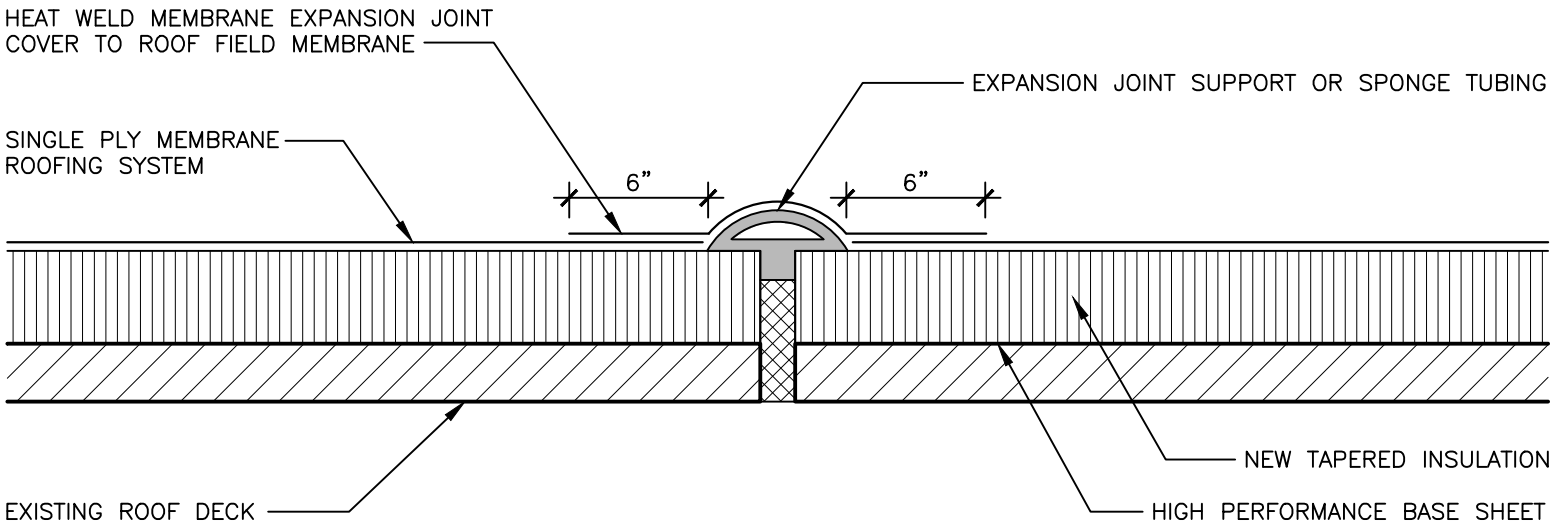

EPDM OR TPO TO BE MECHANICALLY FASTENED OR FULLY ADHERED PURSUANT TO ENGINEERED DESIGN.

BID

130625

DRAWING FILE NO. 4-137-52	CAD FILE: 11926-R30-ROOF	TOTAL:	SHEET NO. R-30 OF 42

PROJECT # 11926
ROOFING CITY WIDE

ROOF EXPANSION JOINT

REVISIONS

NO.	DATE	BY	CHK'D	DESCRIPTION

CITY OF FORT LAUDERDALE
PUBLIC WORKS DEPARTMENT
ENGINEERING & ARCHITECTURE
100 North Andrews Avenue, Fort Lauderdale, Florida 33301

DRAWN BY: RD	DATE: 6/25/13
DESIGNED BY: RD	SCALE: NTS
CHECKED BY: CS	
FIELD BOOK:	

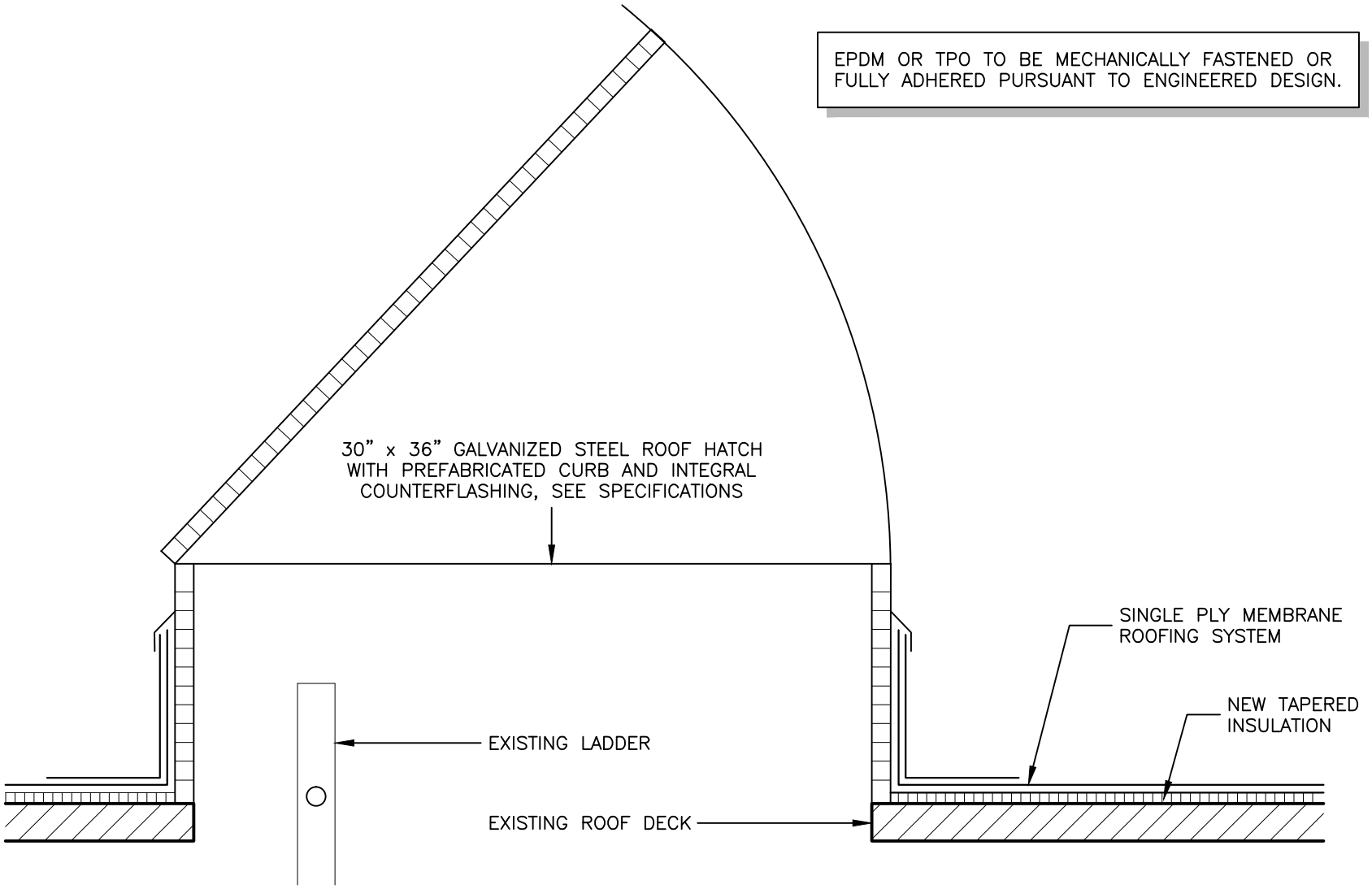

BID

130625

DRAWING FILE NO. 4-137-52	CAD FILE: 11926-R31-ROOF	TOTAL:	SHEET NO. R-31 OF 42

PROJECT # 11926
ROOFING CITY WIDE

ROOF HATCH DETAIL

REVISIONS

NO.	DATE	BY	CHK'D	DESCRIPTION

CITY OF FORT LAUDERDALE
PUBLIC WORKS DEPARTMENT
ENGINEERING & ARCHITECTURE
100 North Andrews Avenue, Fort Lauderdale, Florida 33301

DRAWN BY: RD	DATE: 6/25/13
DESIGNED BY: RD	SCALE: NTS
CHECKED BY: CS	
FIELD BOOK:	

EPDM OR TPO TO BE MECHANICALLY FASTENED OR FULLY ADHERED PURSUANT TO ENGINEERED DESIGN.

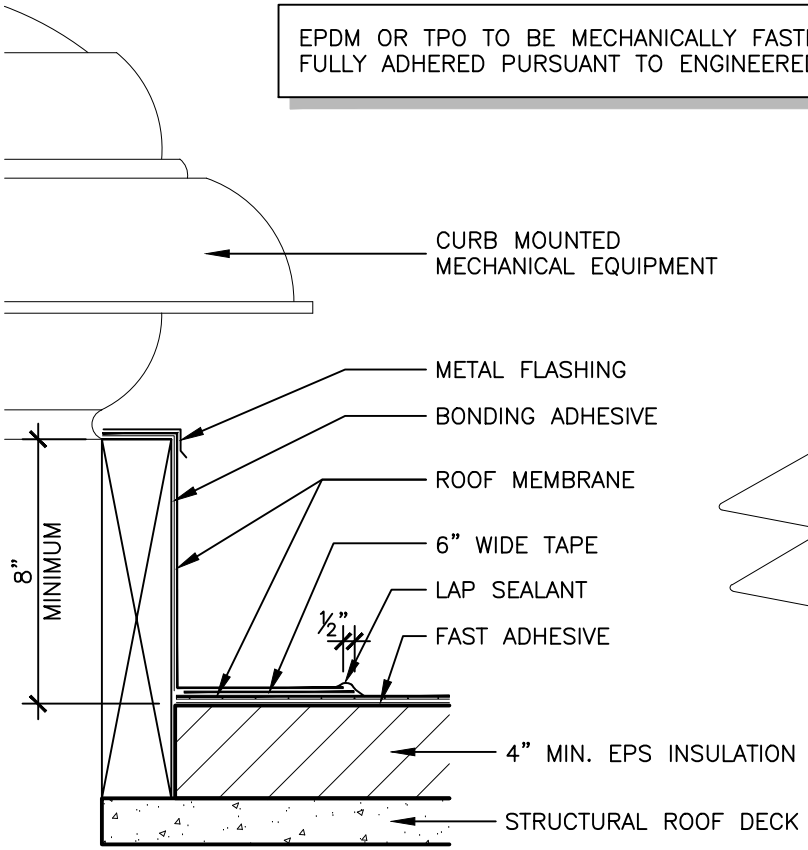

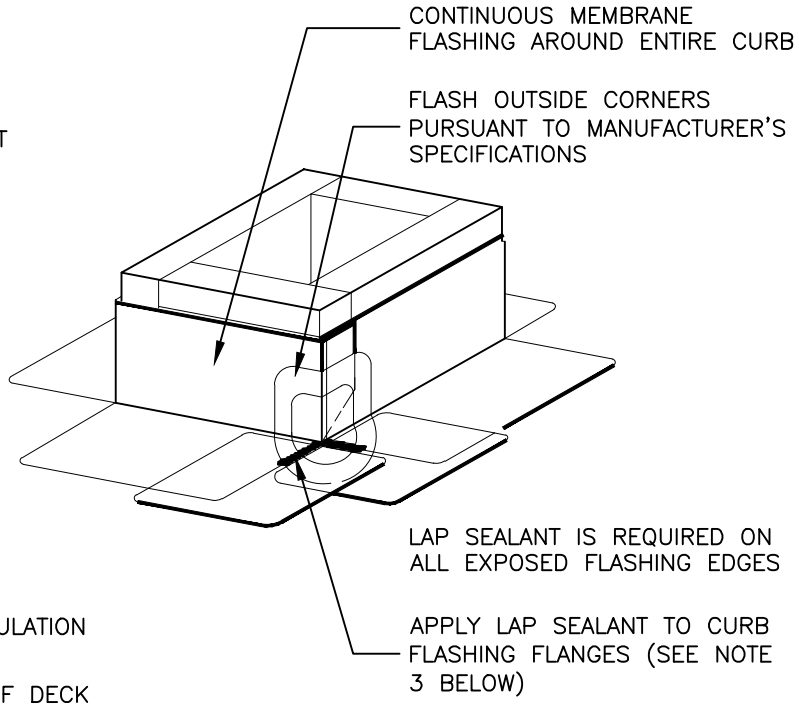

NOTES:

1. IF VERTICAL SPLICE IS NOT LOCATED AT CORNER, A 4.5"x 6" AND A 9" x 12" PIECE OF PRESSURE-SENSITIVE ELASTOFORM FLASHING MUST BE CENTERED OVER FIELD SPLICE AT ANGLE CHANGE.
2. APPLY PRIMER PRIOR TO INSTALLING TAPE.
3. APPLY LAP SEALANT ALONG THE EDGES OF THE CURB FLASHING FLANGES EXTENDING 2" MINIMUM FROM THE CORNER OF THE CURB.

BID

130625

SHEET NO. R-32 OF 42	PROJECT # 11926 ROOFING CITY WIDE EXHAUST FAN OR ROOF VENT DETAIL	CITY OF FORT LAUDERDALE PUBLIC WORKS DEPARTMENT ENGINEERING & ARCHITECTURE 100 North Andrews Avenue, Fort Lauderdale, Florida 33301

TOTAL:
CAD FILE: 11926-R32-ROOF
DRAWING FILE NO. 4-137-52

REVISIONS

NO.	DATE	BY	CHK'D	DESCRIPTION

DRAWN BY: RD	DATE: 6/25/13
DESIGNED BY: RD	SCALE: NTS
CHECKED BY: CS	
FIELD BOOK:	

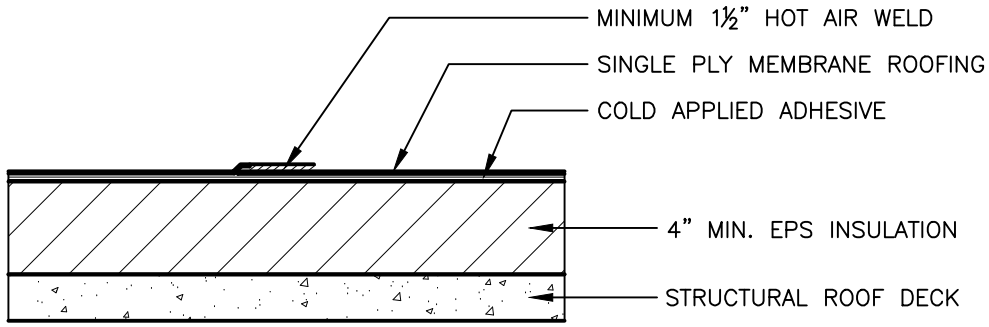

NOTES:

1. PRIOR TO INSTALLATION OF FACTORY–APPLIED TAPE, APPLY PRIMER TO SPLICE AREAS.
2. AT FIELD SPLICE INTERSECTIONS, APPLY A 6 INCH WIDE SECTION OF PRESSURE–SENSITIVE OVERLAYMENT STRIP OR UNCURED FLASHING AND SEAL EDGES WITH LAP SEALANT.

EPDM OR TPO TO BE MECHANICALLY FASTENED OR FULLY ADHERED PURSUANT TO ENGINEERED DESIGN.

BID

130625

SHEET NO. R-33 OF 42	TOTAL:	CAD FILE: 11926–R33–ROOF	DRAWING FILE NO. 4–137–52

PROJECT # 11926
ROOFING CITY WIDE

ROOF MEMBRANE SPLICE DETAIL

REVISIONS

NO.	DATE	BY	CHK'D	DESCRIPTION

CITY OF FORT LAUDERDALE
PUBLIC WORKS DEPARTMENT
ENGINEERING & ARCHITECTURE
100 North Andrews Avenue, Fort Lauderdale, Florida 33301

DRAWN BY: RD	DATE: 6/25/13
DESIGNED BY: RD	SCALE: NTS
CHECKED BY: CS	
FIELD BOOK:	

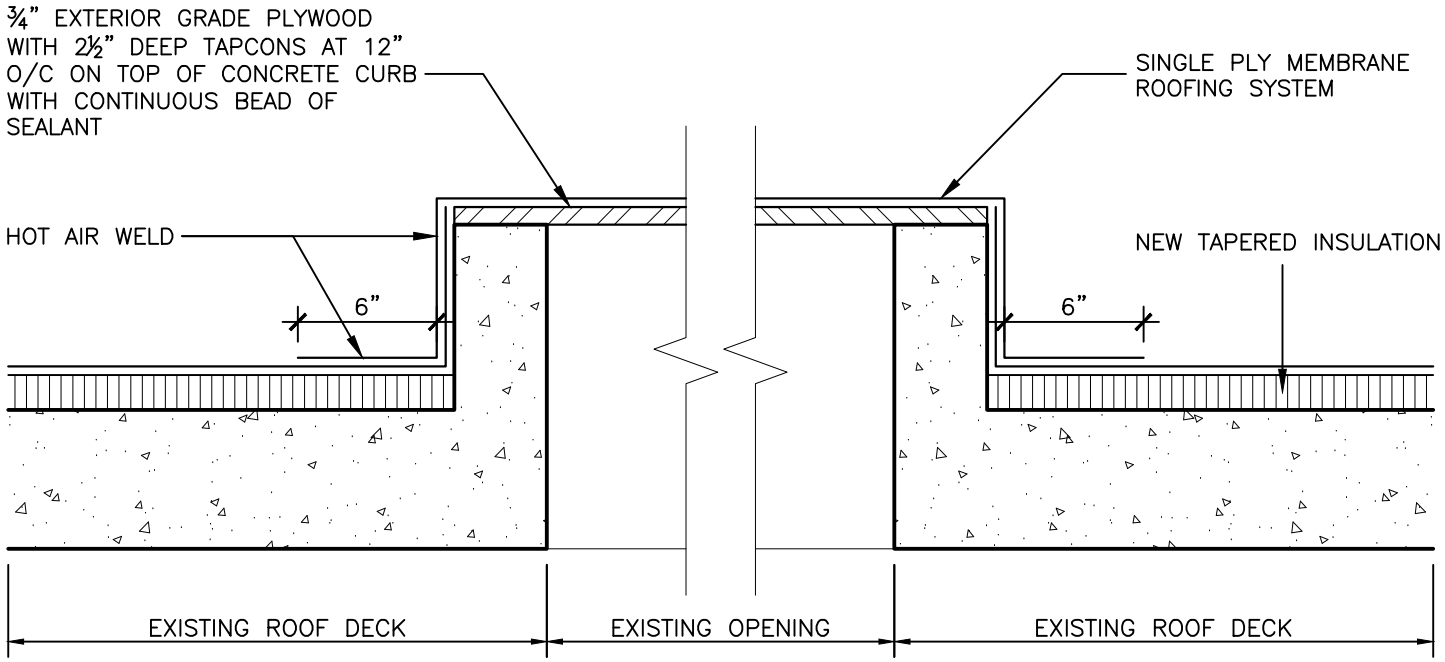

EPDM OR TPO TO BE MECHANICALLY FASTENED OR FULLY ADHERED PURSUANT TO ENGINEERED DESIGN.

BID

130625

SHEET NO. R-34 OF 42	PROJECT # 11926 ROOFING CITY WIDE ROOF OPENING ENCLOSURE DETAIL	CITY OF FORT LAUDERDALE PUBLIC WORKS DEPARTMENT ENGINEERING & ARCHITECTURE 100 North Andrews Avenue, Fort Lauderdale, Florida 33301

TOTAL:
CAD FILE: 11926-R34-ROOF
DRAWING FILE NO. 4-137-52

REVISIONS

NO.	DATE	BY	CHK'D	DESCRIPTION

DRAWN BY: RD	DATE: 6/25/13
DESIGNED BY: RD	SCALE: NTS
CHECKED BY: CS	
FIELD BOOK:	

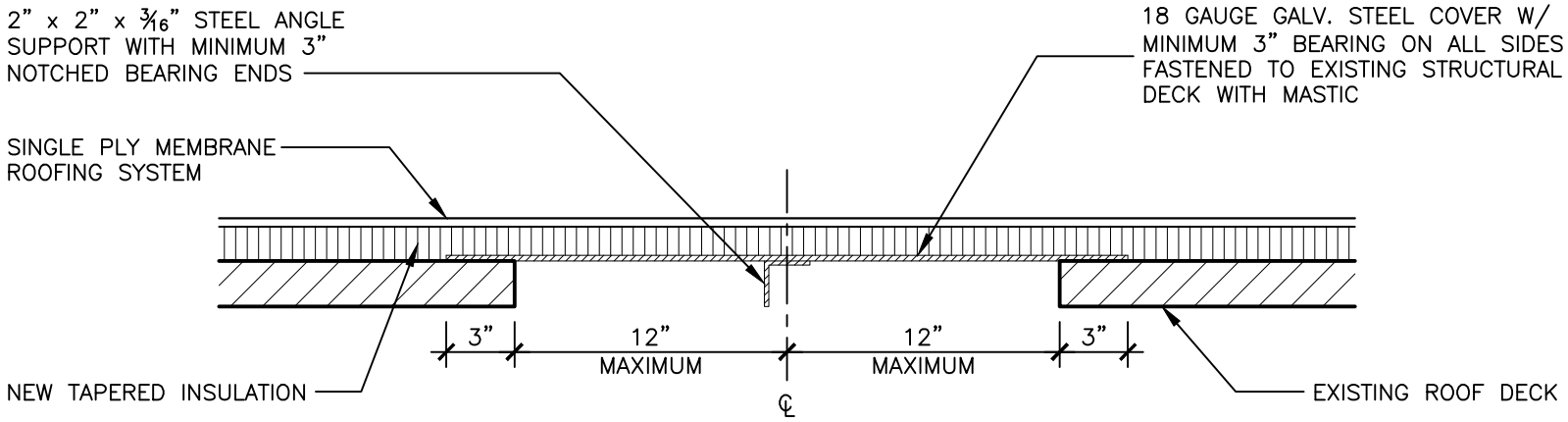

EPDM OR TPO TO BE MECHANICALLY FASTENED OR FULLY ADHERED PURSUANT TO ENGINEERED DESIGN.

BID

130625

SHEET NO. R-35 OF 42	TOTAL:	CAD FILE: 11926-R35-ROOF	DRAWING FILE NO. 4-137-52

PROJECT # 11926
ROOFING CITY WIDE

ROOF DECK OPENING COVER DETAIL

REVISIONS

NO.	DATE	BY	CHK'D	DESCRIPTION

CITY OF FORT LAUDERDALE
PUBLIC WORKS DEPARTMENT
ENGINEERING & ARCHITECTURE
100 North Andrews Avenue, Fort Lauderdale, Florida 33301

DRAWN BY: RD	DATE: 6/25/13
DESIGNED BY: RD	SCALE: NTS
CHECKED BY: CS	
FIELD BOOK:	

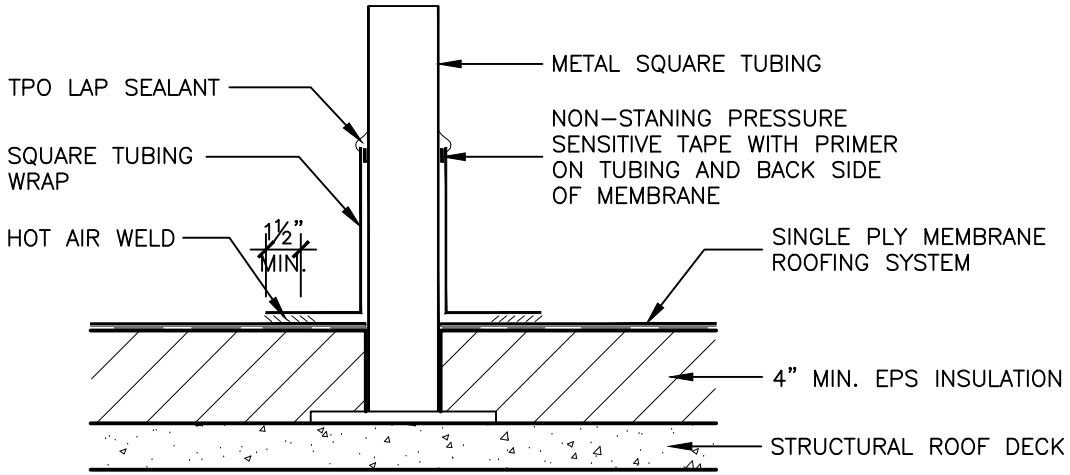

NOTES:
1. TEMPERATURE OF PIPE MUST NOT EXCEED 120° F

2. APPROXIMATELY ⅛" DIAMETER BEAD OF SEALANT IS REQUIRED ON EDGES OF SQUARE TUBING WRAP.

EPDM OR TPO TO BE MECHANICALLY FASTENED OR FULLY ADHERED PURSUANT TO ENGINEERED DESIGN.

BID

130625

SHEET NO. R-36 OF 42	PROJECT # 11926 ROOFING CITY WIDE ROOF EQUIPMENT STAND DETAIL	CITY OF FORT LAUDERDALE PUBLIC WORKS DEPARTMENT ENGINEERING & ARCHITECTURE 100 North Andrews Avenue, Fort Lauderdale, Florida 33301

TOTAL:
CAD FILE: 11926–R36–ROOF
DRAWING FILE NO. 4–137–52

REVISIONS

NO.	DATE	BY	CHK'D	DESCRIPTION

DRAWN BY: RD	DATE: 6/25/13
DESIGNED BY: RD	SCALE: NTS
CHECKED BY: CS	
FIELD BOOK:	

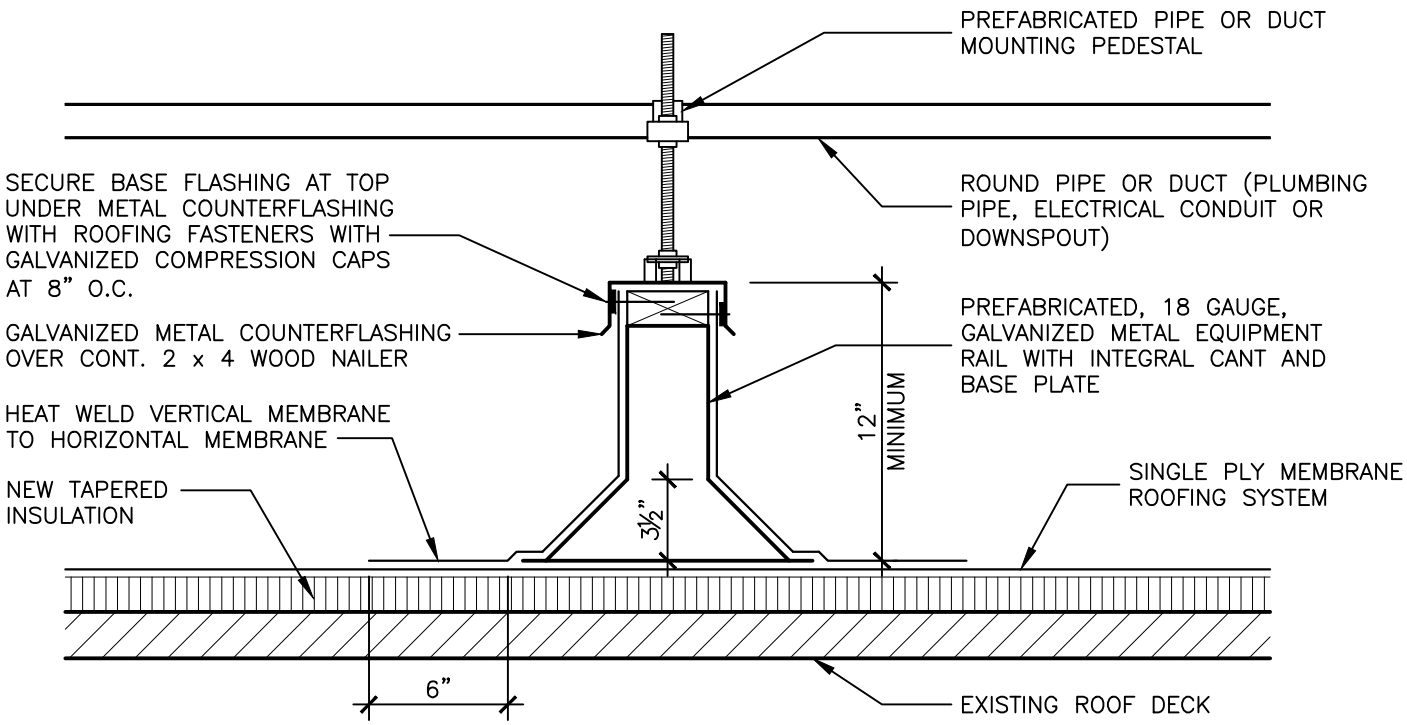

EPDM OR TPO TO BE MECHANICALLY FASTENED OR FULLY ADHERED PURSUANT TO ENGINEERED DESIGN.

BID

130625

SHEET NO.	R-37
OF	42
TOTAL:	
CAD FILE:	11926-R37-ROOF
DRAWING FILE NO.	4-137-52

PROJECT # 11926
ROOFING CITY WIDE

PIPE OR DUCT PEDESTAL DETAIL

REVISIONS

NO.	DATE	BY	CHK'D	DESCRIPTION

CITY OF FORT LAUDERDALE
PUBLIC WORKS DEPARTMENT
ENGINEERING & ARCHITECTURE
100 North Andrews Avenue, Fort Lauderdale, Florida 33301

DRAWN BY: RD	DATE: 6/25/13
DESIGNED BY: RD	SCALE: NTS
CHECKED BY: CS	
FIELD BOOK:	

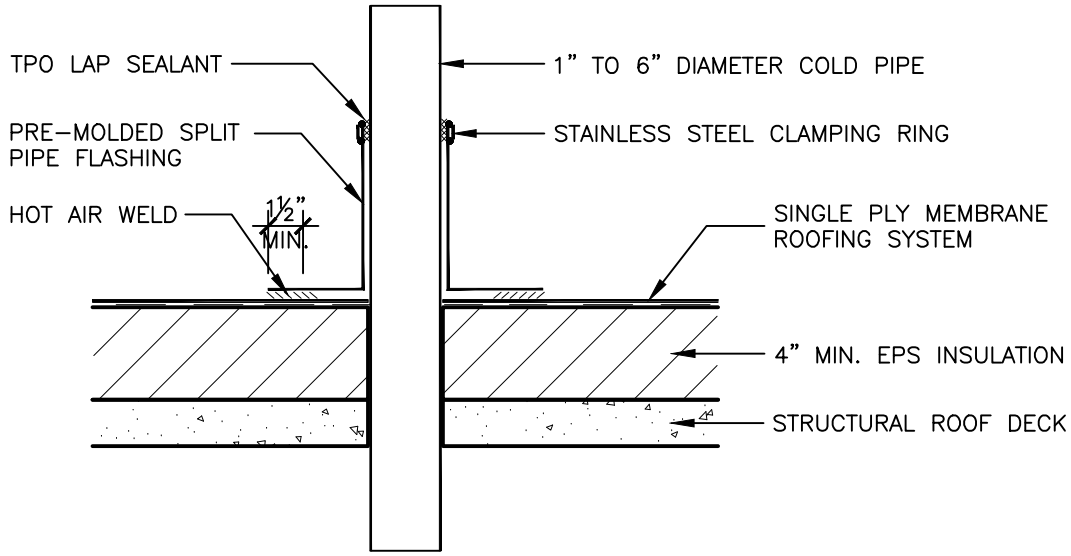

NOTES:

1. TEMPERATURE OF PIPE MUST NOT EXCEED 120° F
2. PIPE SEAL MUST HAVE INTACT RIB AT TOP EDGE, REGARDLESS OF PIPE DIAMETER
3. WRAP THE PIPE FLASHING AROUND THE VENT PIPE AND HOT AIR WELD VERTICAL OVERLAP. AFTER THE VERTICAL WELD IS COMPLETE, WELD BASE FLANGE TO THE FIELD MEMBRANE.

EPDM OR TPO TO BE MECHANICALLY FASTENED OR FULLY ADHERED PURSUANT TO ENGINEERED DESIGN.

BID

130625

SHEET NO.	R-38
OF	42
TOTAL:	
CAD FILE:	11926-R38-ROOF
DRAWING FILE NO.	4-137-52

PROJECT # 11926
ROOFING CITY WIDE

PLUMBING ROOF VENT DETAIL

REVISIONS

NO.	DATE	BY	CHK'D	DESCRIPTION

CITY OF FORT LAUDERDALE
PUBLIC WORKS DEPARTMENT
ENGINEERING & ARCHITECTURE
100 North Andrews Avenue, Fort Lauderdale, Florida 33301

DRAWN BY: RD	DATE: 6/25/13
DESIGNED BY: RD	SCALE: NTS
CHECKED BY: CS	
FIELD BOOK:	

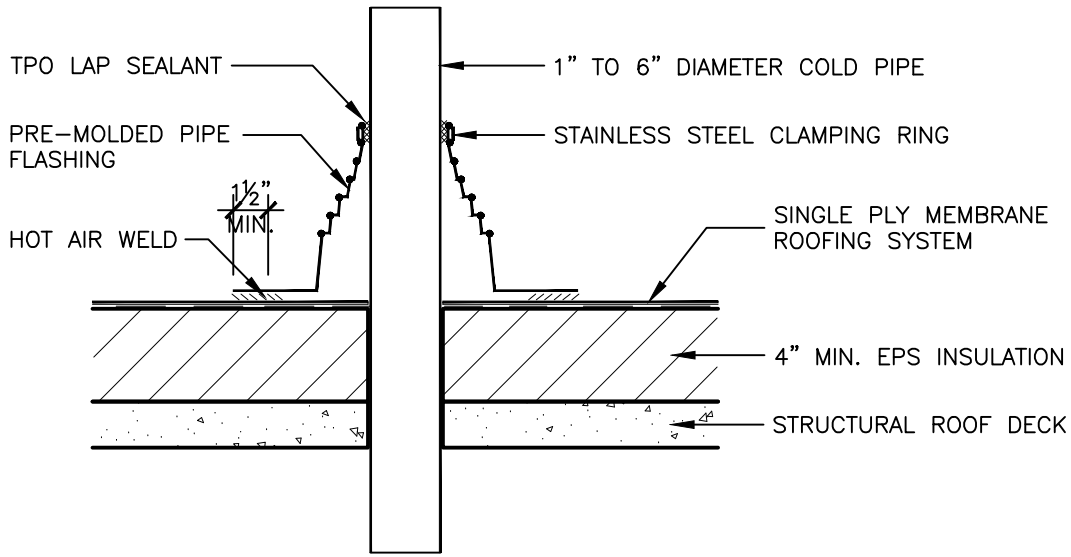

NOTES:
1. TEMPERATURE OF PIPE MUST NOT EXCEED 120° F
2. PIPE SEAL MUST HAVE INTACT RIB AT TOP EDGE, REGARDLESS OF PIPE DIAMETER
3. INSTALL A SECTION OF REINFORCED MEMBRANE OVER SPLICE INTERSECTIONS PRIOR TO INSTALLING PREMOLDED PIPE FLASHING

EPDM OR TPO TO BE MECHANICALLY FASTENED OR FULLY ADHERED PURSUANT TO ENGINEERED DESIGN.

BID

13/06/25

DRAWING FILE NO. 4-137-52
CAD FILE: 11926-R39-ROOF
TOTAL:
SHEET NO. R-39 OF 42

PROJECT # 11926
ROOFING CITY WIDE

ROOF PENETRATION DETAIL

REVISIONS				
NO.	DATE	BY	CHK'D	DESCRIPTION

CITY OF FORT LAUDERDALE
PUBLIC WORKS DEPARTMENT
ENGINEERING & ARCHITECTURE
100 North Andrews Avenue, Fort Lauderdale, Florida 33301

DRAWN BY: RD	DATE: 6/25/13
DESIGNED BY: RD	SCALE: NTS
CHECKED BY: CS	
FIELD BOOK:	

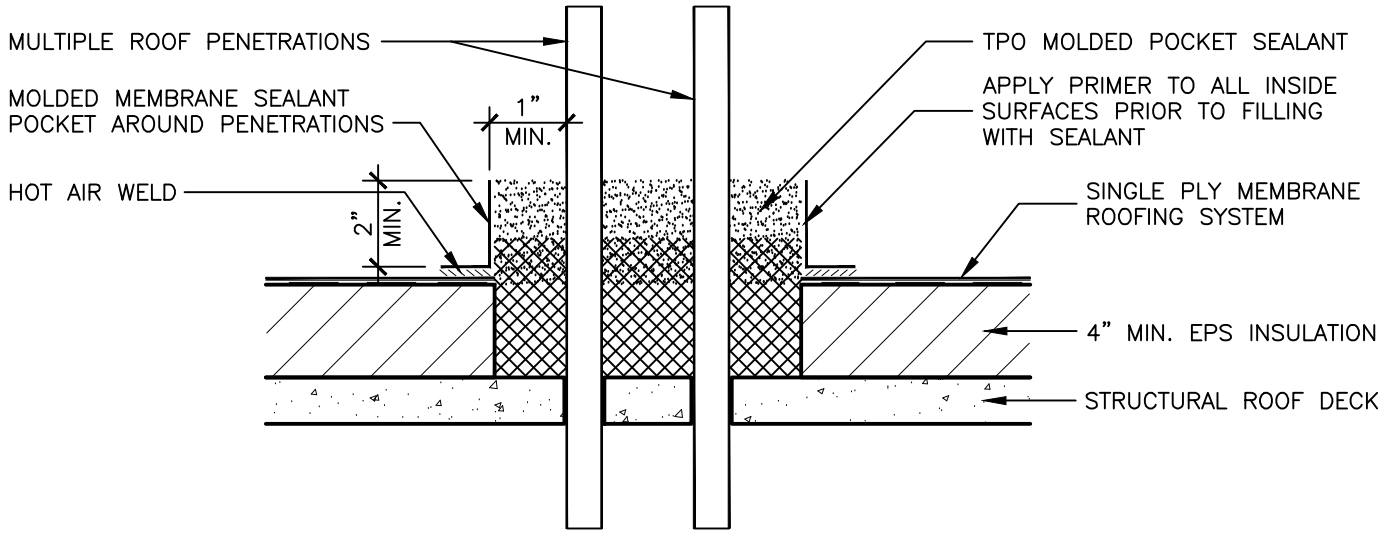

NOTES:

1. TEMPERATURE OF PIPE MUST NOT EXCEED 120° F
2. PIPE SEAL MUST HAVE INTACT RIB AT TOP EDGE, REGARDLESS OF PIPE DIAMETER
3. WRAP THE PIPE FLASHING AROUND THE VENT PIPE AND HOT AIR WELD VERTICAL OVERLAP. AFTER THE VERTICAL WELD IS COMPLETE, WELD BASE FLANGE TO THE FIELD MEMBRANE.

EPDM OR TPO TO BE MECHANICALLY FASTENED OR FULLY ADHERED PURSUANT TO ENGINEERED DESIGN.

BID

130625

SHEET NO.	R-40
OF	42
TOTAL:	
CAD FILE:	11926-R40-ROOF
DRAWING FILE NO.	4-137-52

PROJECT # 11926
ROOFING CITY WIDE

TPO SEALANT POCKET DETAIL

REVISIONS

NO.	DATE	BY	CHK'D	DESCRIPTION

CITY OF FORT LAUDERDALE
PUBLIC WORKS DEPARTMENT
ENGINEERING & ARCHITECTURE
100 North Andrews Avenue, Fort Lauderdale, Florida 33301

DRAWN BY: RD	DATE: 6/25/13
DESIGNED BY: RD	SCALE: NTS
CHECKED BY: CS	
FIELD BOOK:	

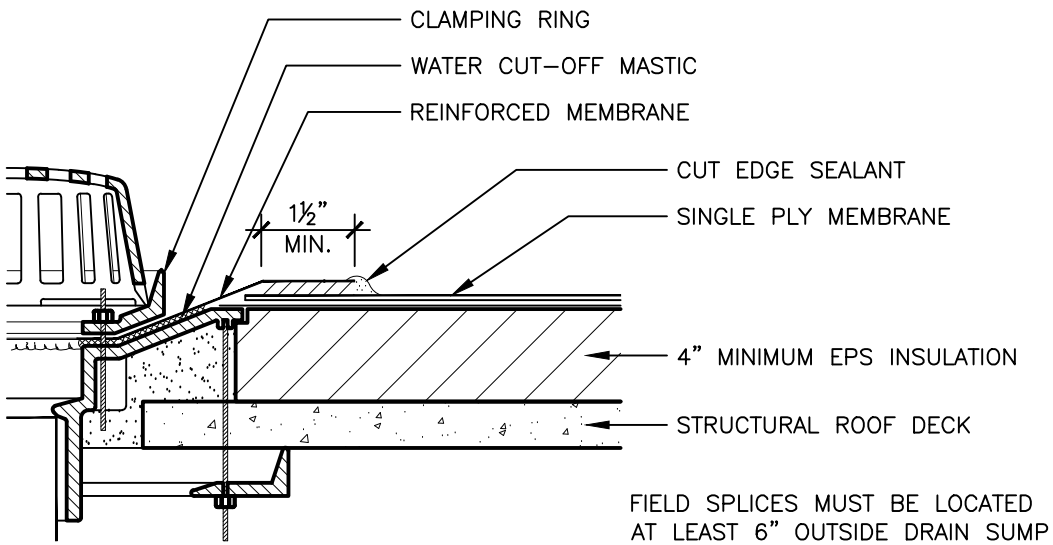

FIELD SPLICES MUST BE LOCATED AT LEAST 6" OUTSIDE DRAIN SUMP

NOTES:

1. BOLTS AND CLAMPING RING MUST BE IN PLACE TO PROVIDE CONSTANT COMPRESSION ON WATER CUT–OFF MASTIC
2. CUT THE MEMBRANE SO IT EXTENDS A MIN. OF 1/2" FROM THE ATTACHMENT POINTS OF THE DRAIN CLAMPING RING
3. HOLE IN MEMBRANE MUST EXCEED SIZE OF DRAIN PIPE
4. INSULATION TAPER SHALL NOT BE MORE THAN 6" VERTICAL IN 12" HORIZONTAL
5. APPROXIMATELY ⅛" DIAMETER BEAD OF SEALANT IS REQUIRED ON CUT EDGES OF TPO MEMBRANE

EPDM OR TPO TO BE MECHANICALLY FASTENED OR FULLY ADHERED PURSUANT TO ENGINEERED DESIGN.

BID

130625

SHEET NO.	R-41
OF	42
TOTAL:	
CAD FILE:	11926–R41–ROOF
DRAWING FILE NO.	4–137–52

PROJECT # 11926
ROOFING CITY WIDE

ROOF DRAIN DETAIL

REVISIONS

NO.	DATE	BY	CHK'D	DESCRIPTION

CITY OF FORT LAUDERDALE
PUBLIC WORKS DEPARTMENT
ENGINEERING & ARCHITECTURE
100 North Andrews Avenue, Fort Lauderdale, Florida 33301

DRAWN BY: RD	DATE: 6/25/13
DESIGNED BY: RD	SCALE: NTS
CHECKED BY: CS	
FIELD BOOK:	

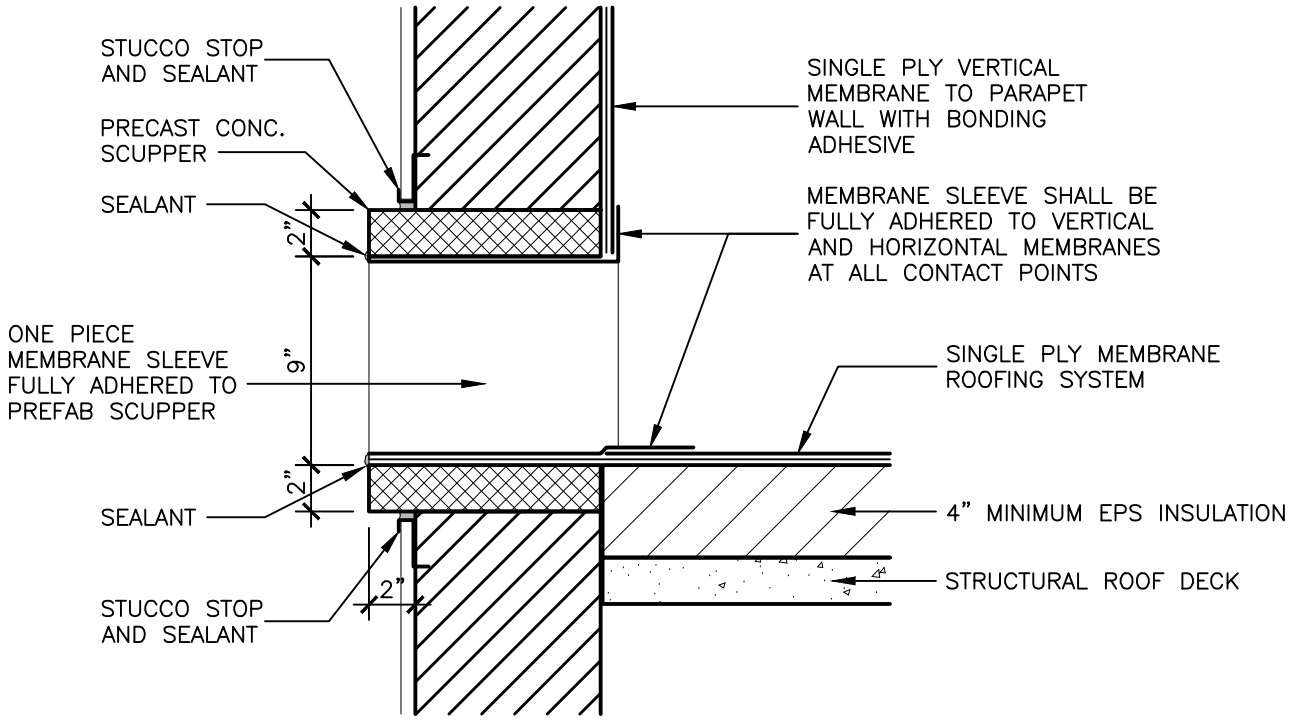

NOTES:

1. ALL MEMBRANE SPLICES SHALL BE 3" MINIMUM.
2. OVERFLOW POINT OF SCUPPER SHALL BE A MAXIMUM ELEVATION OF 4 INCHES ABOVE ROOF DRAIN.

EPDM OR TPO TO BE MECHANICALLY FASTENED OR FULLY ADHERED PURSUANT TO ENGINEERED DESIGN.

BID

130625

CAD FILE: 11526-R42-ROOF	TOTAL:	SHEET NO. R-42	OF 42
DRAWING FILE NO. 4-137-52			

PROJECT # 11926
ROOFING CITY WIDE

ROOF SCUPPER DETAIL

REVISIONS

NO.	DATE	BY	CHK'D	DESCRIPTION

CITY OF FORT LAUDERDALE
PUBLIC WORKS DEPARTMENT
ENGINEERING & ARCHITECTURE
100 North Andrews Avenue, Fort Lauderdale, Florida 33301

DRAWN BY: RD	DATE: 6/25/13
DESIGNED BY: RD	SCALE: NTS
CHECKED BY: CS	
FIELD BOOK:	

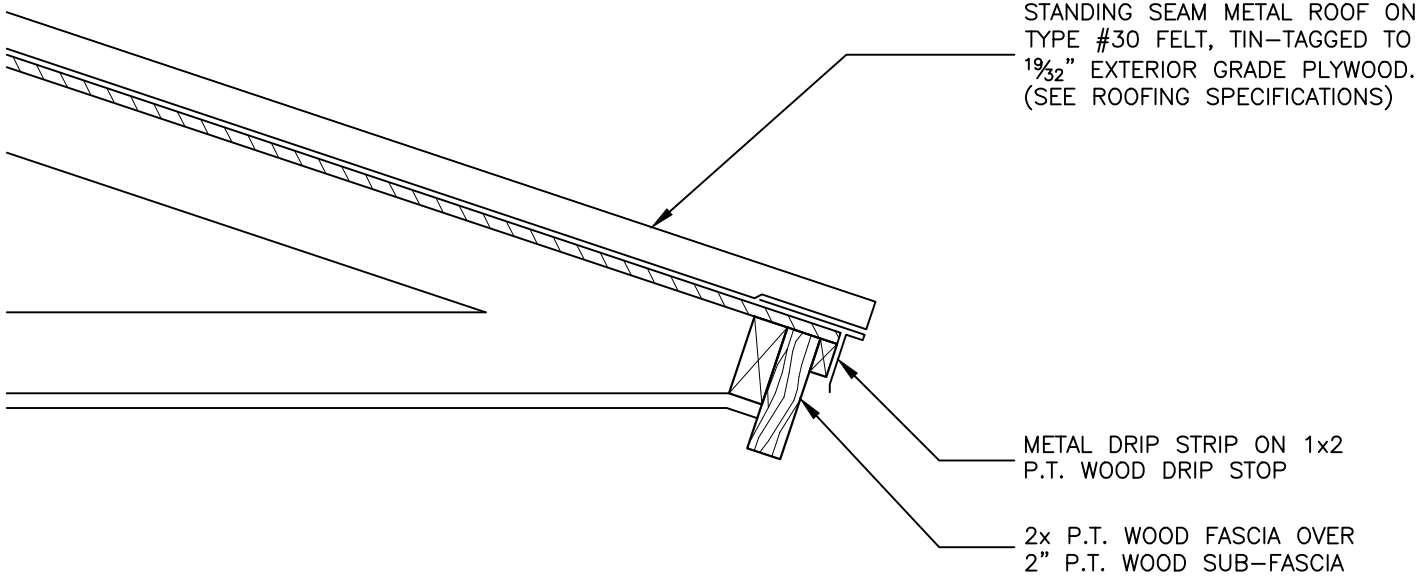

BID

130625

SHEET NO.	S-1
OF	10
TOTAL:	
CAD FILE:	11526-S01-ROOF
DRAWING FILE NO.	4-137-52

PROJECT # 11926
ROOFING CITY WIDE

STANDING SEAM METAL ROOF
WOOD FASCIA DETAIL

REVISIONS

NO.	DATE	BY	CHK'D	DESCRIPTION

CITY OF FORT LAUDERDALE
PUBLIC WORKS DEPARTMENT
ENGINEERING & ARCHITECTURE
100 North Andrews Avenue, Fort Lauderdale, Florida 33301

DRAWN BY: RD	DATE: 6/25/13
DESIGNED BY: RD	SCALE: NTS
CHECKED BY: CS	
FIELD BOOK:	

City of Fort Lauderdale

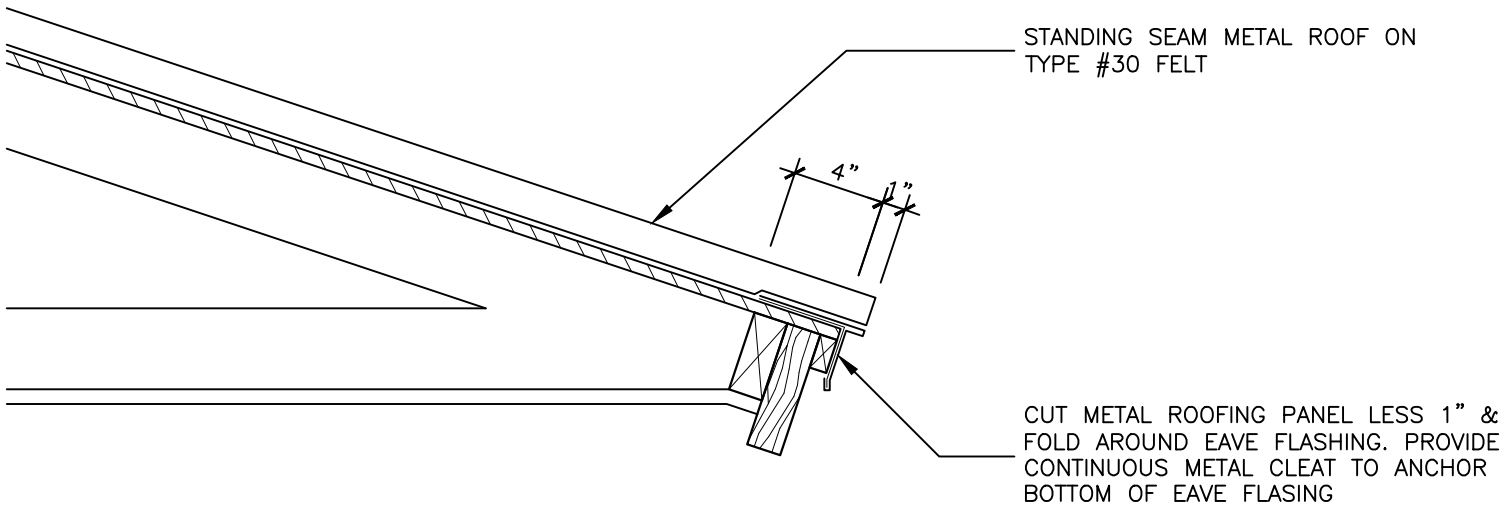

BID

130625

DRAWING FILE NO. 4-137-52	CAD FILE: 11526-S02-ROOF
TOTAL:	SHEET NO. S-2 OF 10

PROJECT # 11926
ROOFING CITY WIDE

STANDING SEAM METAL ROOF
EDGE DETAIL

REVISIONS

NO.	DATE	BY	CHK'D	DESCRIPTION

CITY OF FORT LAUDERDALE
PUBLIC WORKS DEPARTMENT
ENGINEERING & ARCHITECTURE
100 North Andrews Avenue, Fort Lauderdale, Florida 33301

DRAWN BY: RD	DATE: 6/25/13
DESIGNED BY: RD	SCALE: NTS
CHECKED BY: CS	
FIELD BOOK:	

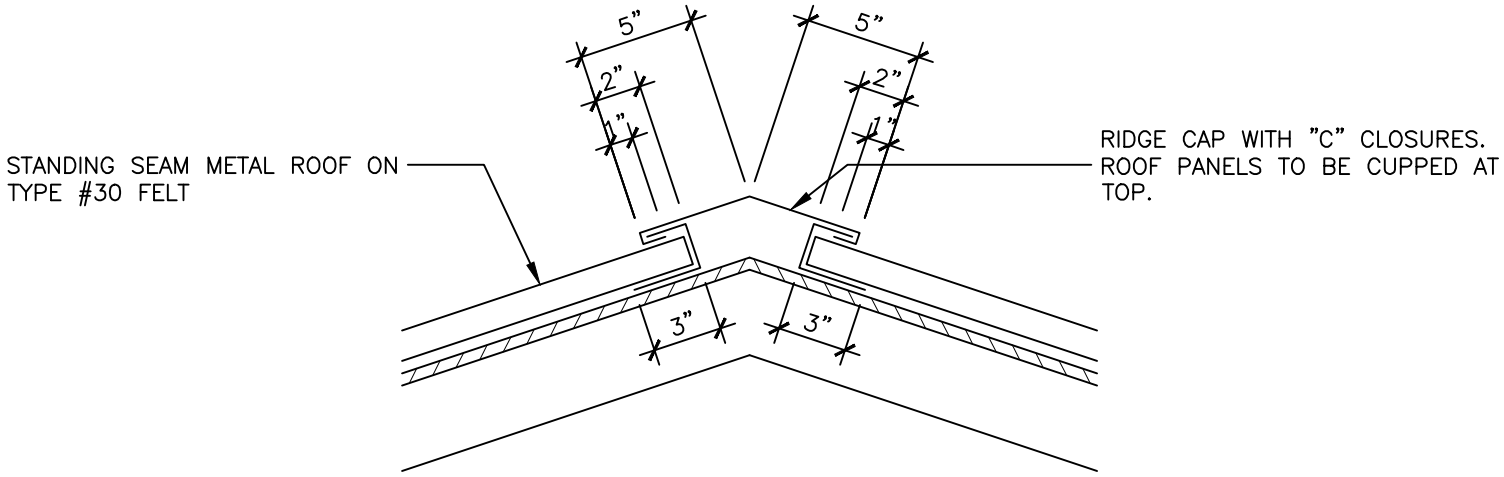

BID

130625

DRAWING FILE NO. 4-137-52	CAD FILE: 11926-S03-ROOF
TOTAL:	SHEET NO. S-3 OF 10

PROJECT # 11926
ROOFING CITY WIDE

STANDING SEAM METAL ROOF
RIDGE DETAIL

REVISIONS

NO.	DATE	BY	CHK'D	DESCRIPTION

CITY OF FORT LAUDERDALE
PUBLIC WORKS DEPARTMENT
ENGINEERING & ARCHITECTURE
100 North Andrews Avenue, Fort Lauderdale, Florida 33301

DRAWN BY: RD	DATE: 6/25/13
DESIGNED BY: RD	SCALE: NTS
CHECKED BY: CS	
FIELD BOOK:	

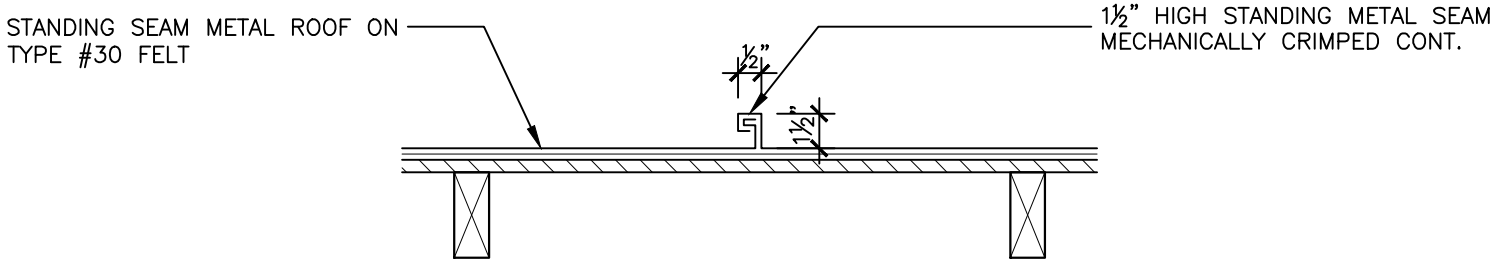

BID

130625

SHEET NO.	S-4
OF	10
TOTAL:	
CAD FILE:	11926-S04-ROOF
DRAWING FILE NO.	4-137-52

PROJECT # 11926
ROOFING CITY WIDE

STANDING SEAM METAL ROOF
SEAM DETAIL

REVISIONS

NO.	DATE	BY	CHK'D	DESCRIPTION

CITY OF FORT LAUDERDALE
PUBLIC WORKS DEPARTMENT
ENGINEERING & ARCHITECTURE
100 North Andrews Avenue, Fort Lauderdale, Florida 33301

DRAWN BY: RD	DATE: 6/25/13
DESIGNED BY: RD	SCALE: NTS
CHECKED BY: CS	
FIELD BOOK:	

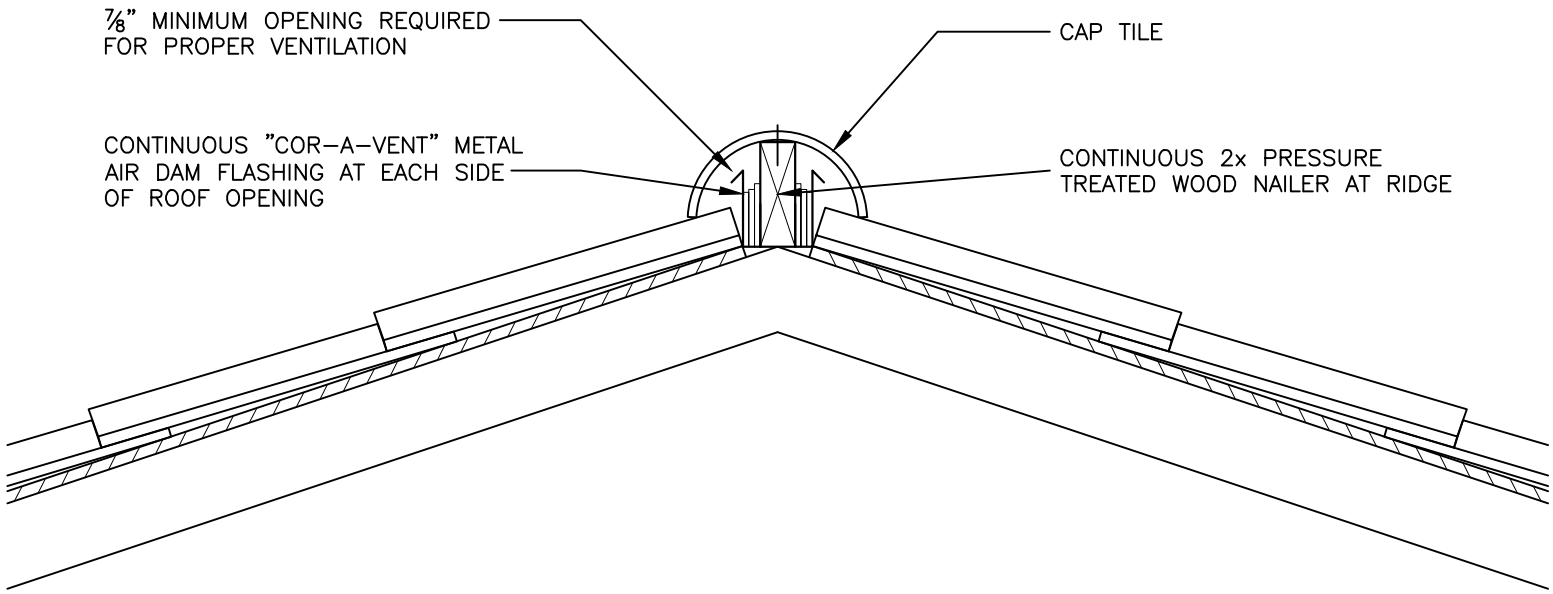

BID

130625

City of Fort Lauderdale

SHEET NO. S-5 OF 10	TOTAL:	CAD FILE: 11926-S05-ROOF DRAWING FILE NO. 4-137-52

PROJECT # 11926
ROOFING CITY WIDE

CONCRETE ROOF TILE
RIDGE DETAIL

REVISIONS

NO.	DATE	BY	CHK'D	DESCRIPTION

CITY OF FORT LAUDERDALE
PUBLIC WORKS DEPARTMENT
ENGINEERING & ARCHITECTURE
100 North Andrews Avenue, Fort Lauderdale, Florida 33301

DRAWN BY: RD	DATE: 6/25/13
DESIGNED BY: RD	SCALE: NTS
CHECKED BY: CS	
FIELD BOOK:	

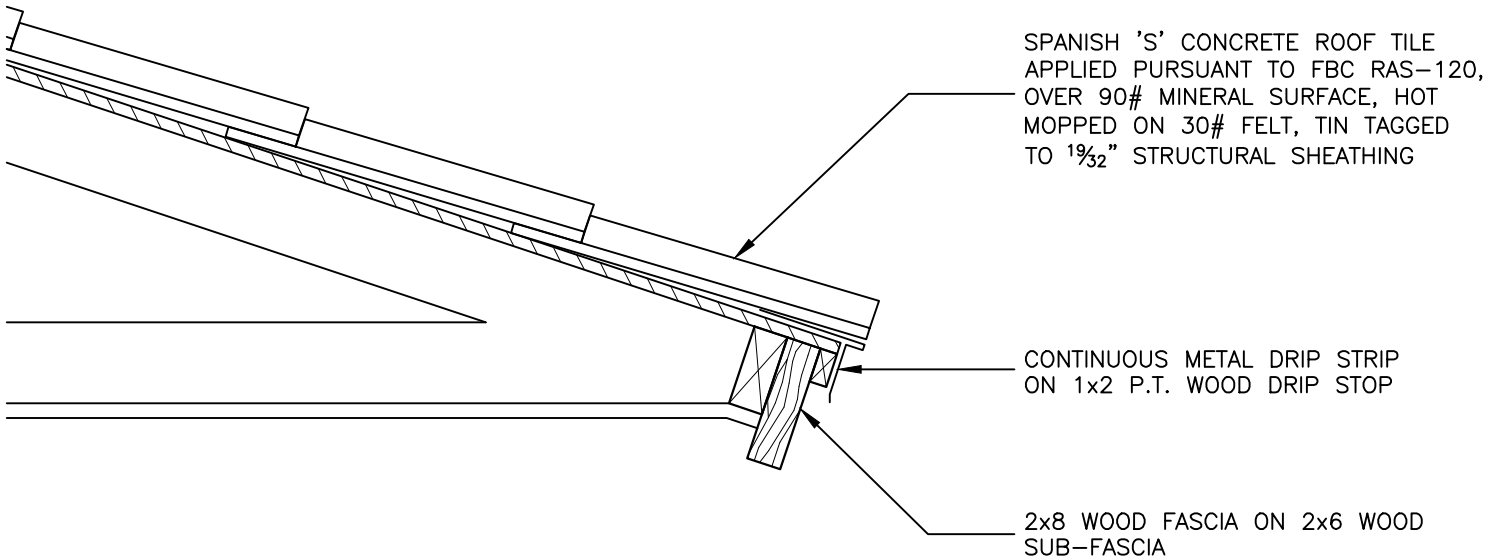

BID

130625

DRAWING FILE NO. 4–137–52	CAD FILE: 11926–S06–ROOF	TOTAL:	SHEET NO. S-6 OF 10

PROJECT # 11926
ROOFING CITY WIDE

CONCRETE ROOF TILE
EDGE DETAIL

REVISIONS

NO.	DATE	BY	CHK'D	DESCRIPTION

CITY OF FORT LAUDERDALE
PUBLIC WORKS DEPARTMENT
ENGINEERING & ARCHITECTURE
100 North Andrews Avenue, Fort Lauderdale, Florida 33301

DRAWN BY: RD	DATE: 6/25/13
DESIGNED BY: RD	SCALE: NTS
CHECKED BY: CS	
FIELD BOOK:	

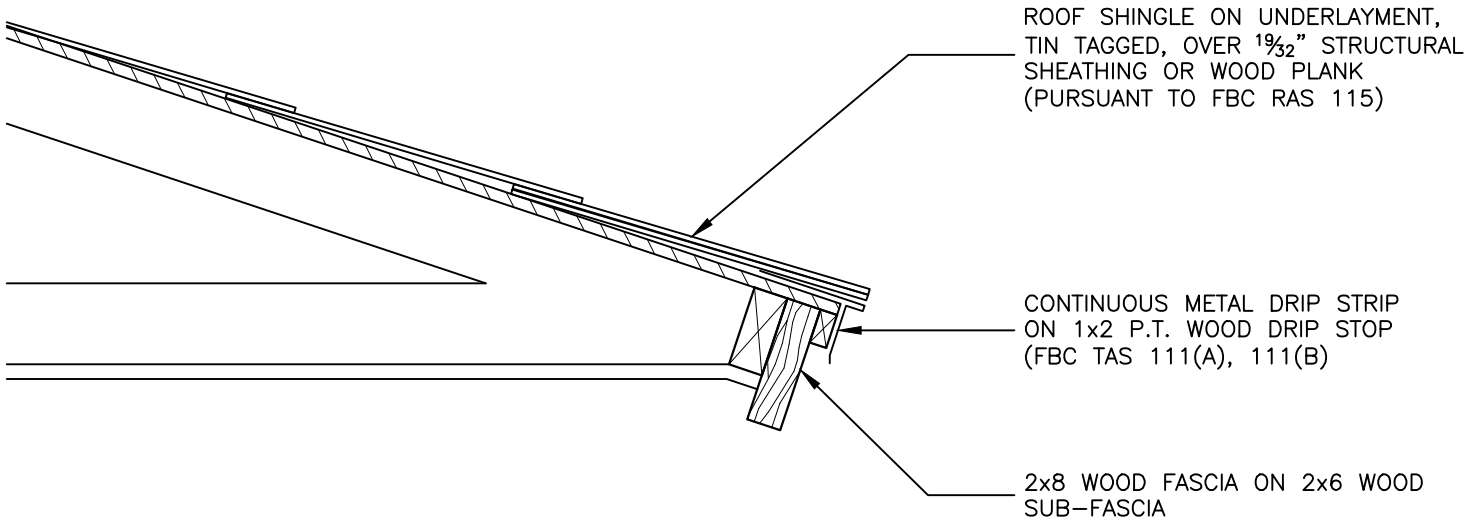

BID

130625

SHEET NO.	S-7
OF	10
TOTAL:	
CAD FILE:	11926-S07-SHINGLE
DRAWING FILE NO.	4-137-52

PROJECT # 11926
ROOFING CITY WIDE

SHINGLE ROOF
EDGE DETAIL

REVISIONS

NO.	DATE	BY	CHK'D	DESCRIPTION

CITY OF FORT LAUDERDALE
PUBLIC WORKS DEPARTMENT
ENGINEERING & ARCHITECTURE
100 North Andrews Avenue, Fort Lauderdale, Florida 33301

DRAWN BY: RD	DATE: 6/25/13
DESIGNED BY: RD	SCALE: NTS
CHECKED BY: CS	
FIELD BOOK:	

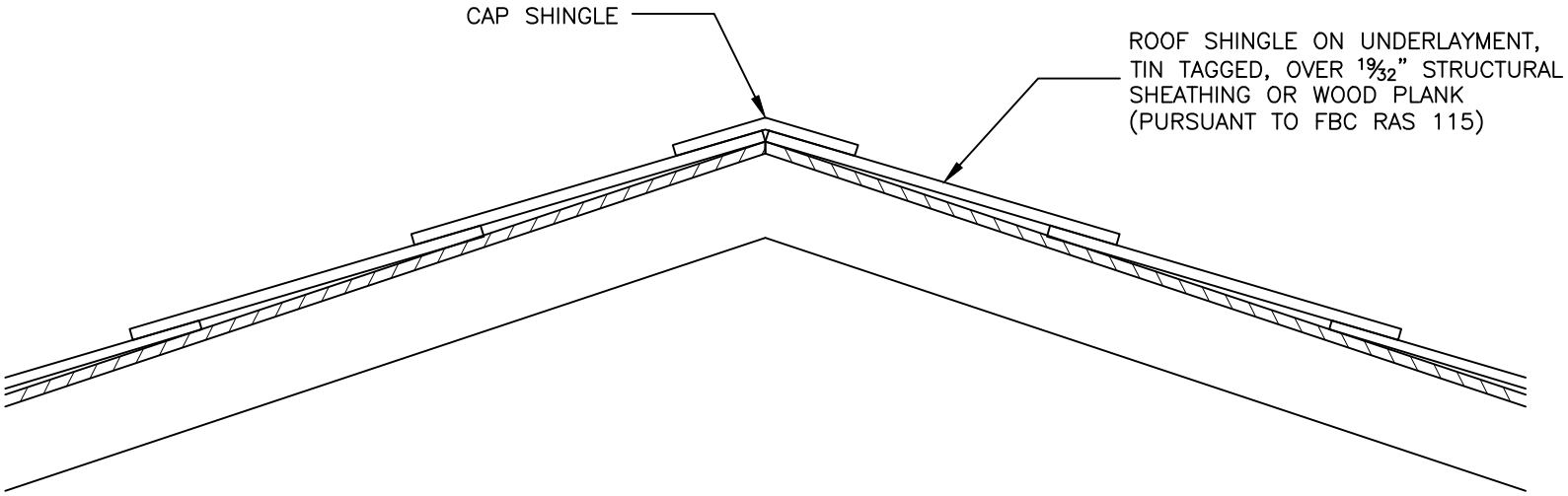

BID

130625

SHEET NO.	S-8
OF	10
TOTAL:	
CAD FILE:	11926-S08-SHINGLE
DRAWING FILE NO.	4-137-52

PROJECT # 11926
ROOFING CITY WIDE

SHINGLE ROOF
RIDGE DETAIL

REVISIONS

NO.	DATE	BY	CHK'D	DESCRIPTION

CITY OF FORT LAUDERDALE
PUBLIC WORKS DEPARTMENT
ENGINEERING & ARCHITECTURE
100 North Andrews Avenue, Fort Lauderdale, Florida 33301

DRAWN BY: RD	DATE: 6/25/12
DESIGNED BY: RD	SCALE: NTS
CHECKED BY: CS	
FIELD BOOK:	

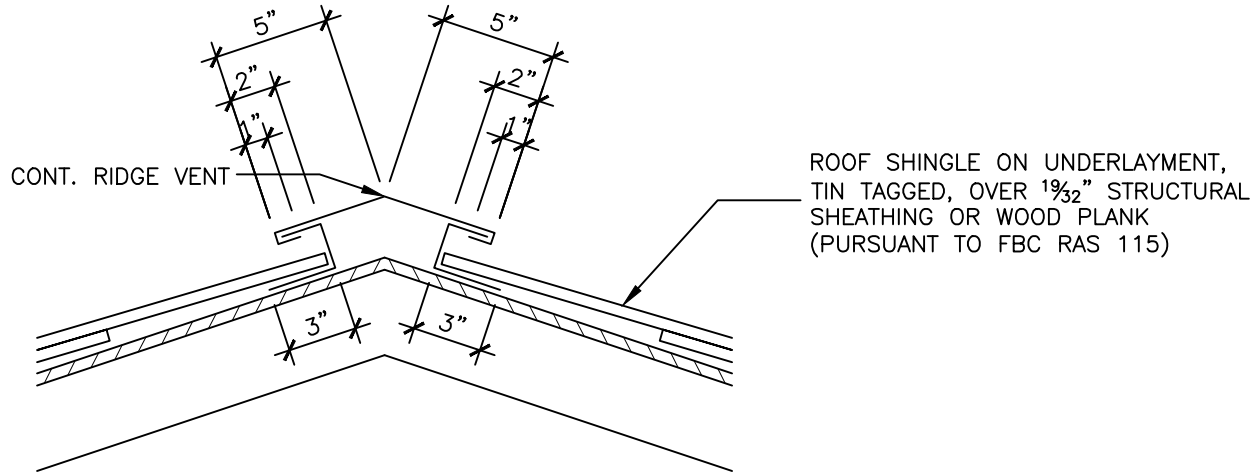

BID

130625

SHEET NO. S-9 OF 10	TOTAL:	CAD FILE: 11926-S09-SHINGLE	DRAWING FILE NO. 4-137-52

PROJECT # 11926
ROOFING CITY WIDE

SHINGLE ROOF
RIDGE VENT DETAIL

REVISIONS

NO.	DATE	BY	CHK'D	DESCRIPTION

CITY OF FORT LAUDERDALE
PUBLIC WORKS DEPARTMENT
ENGINEERING & ARCHITECTURE
100 North Andrews Avenue, Fort Lauderdale, Florida 33301

DRAWN BY: RD	DATE: 6/25/13
DESIGNED BY: RD	SCALE: NTS
CHECKED BY: CS	
FIELD BOOK:	

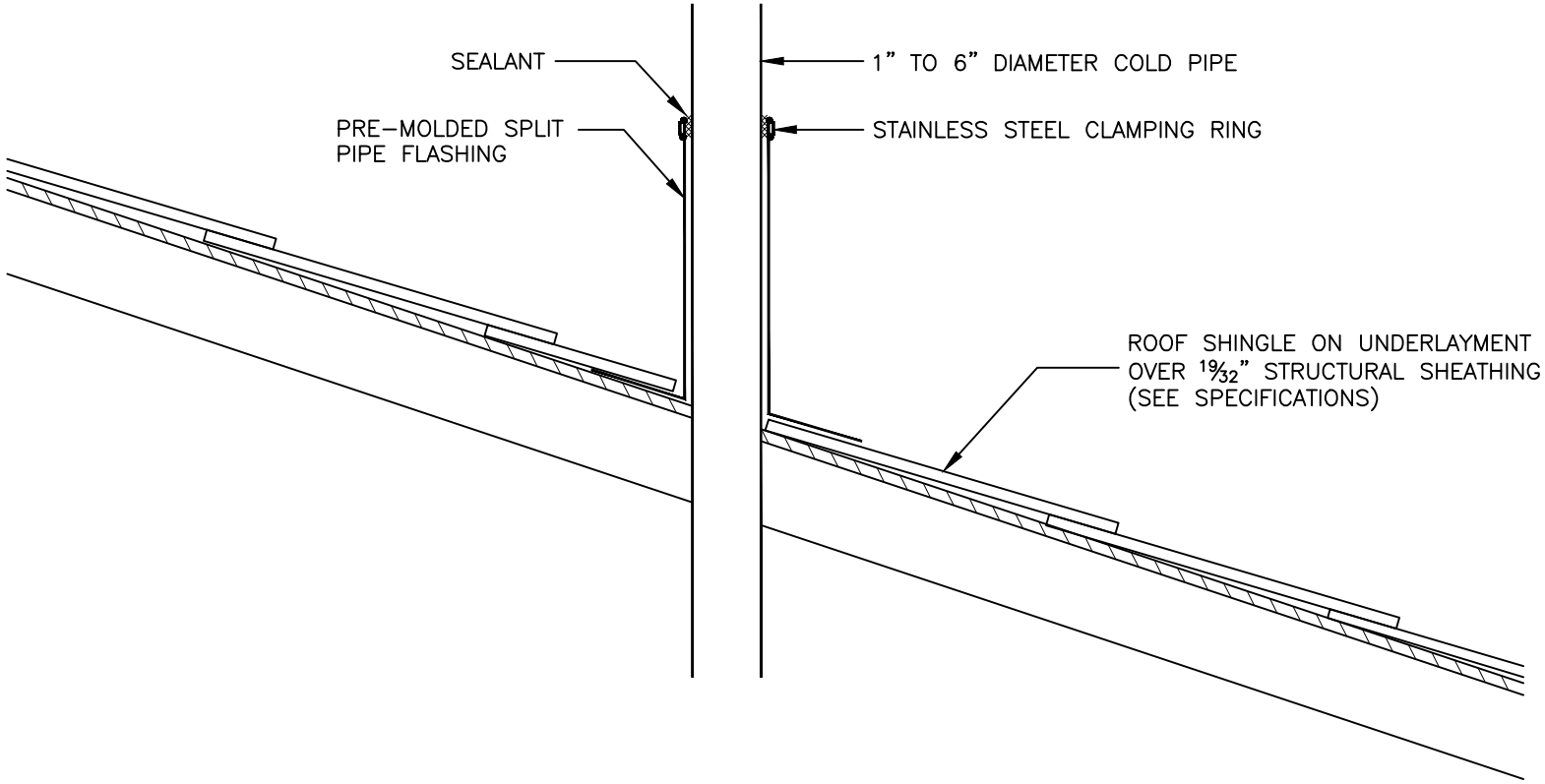

BID

130625

SHEET NO. S-10 OF 10	TOTAL:	CAD FILE: 11926-S10-SHINGLE	DRAWING FILE NO. 4-137-52

PROJECT # 11926
ROOFING CITY WIDE

SHINGLE ROOF
PLUMBING ROOF VENT DETAIL

REVISIONS

NO.	DATE	BY	CHK'D	DESCRIPTION

CITY OF FORT LAUDERDALE
PUBLIC WORKS DEPARTMENT
ENGINEERING & ARCHITECTURE
100 North Andrews Avenue, Fort Lauderdale, Florida 33301

DRAWN BY: RD	DATE: 6/25/13
DESIGNED BY: RD	SCALE: NTS
CHECKED BY: CS	
FIELD BOOK:	

Question and Answers for Bid #243-11292 - Project 11926 Annual Roofing Repair and Replacement City Wide

OVERALL BID QUESTIONS

There are no questions associated with this bid. If you would like to submit a question, please click on the "Create New Question" button below.